MAXIMA 1.5

EAVE DRIP TRIM DETAIL

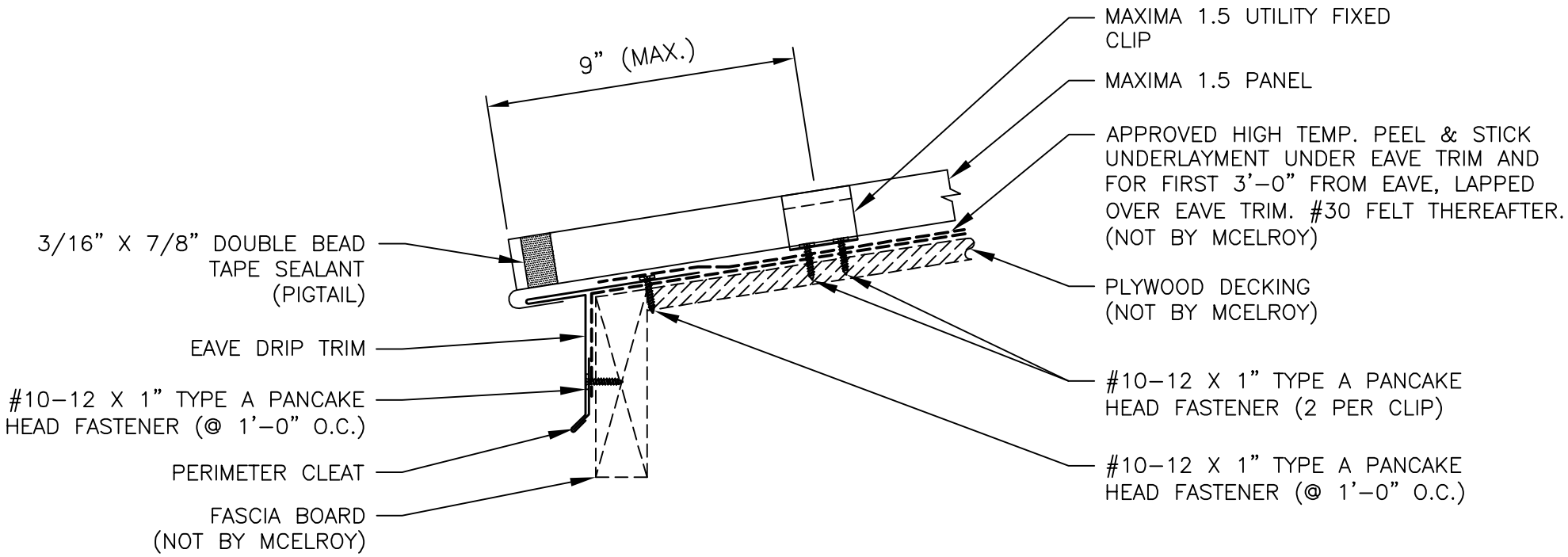

McELROY METAL, INC.

DATE CREATED: 05/09/08