EAVE w/ GUTTER DETAIL

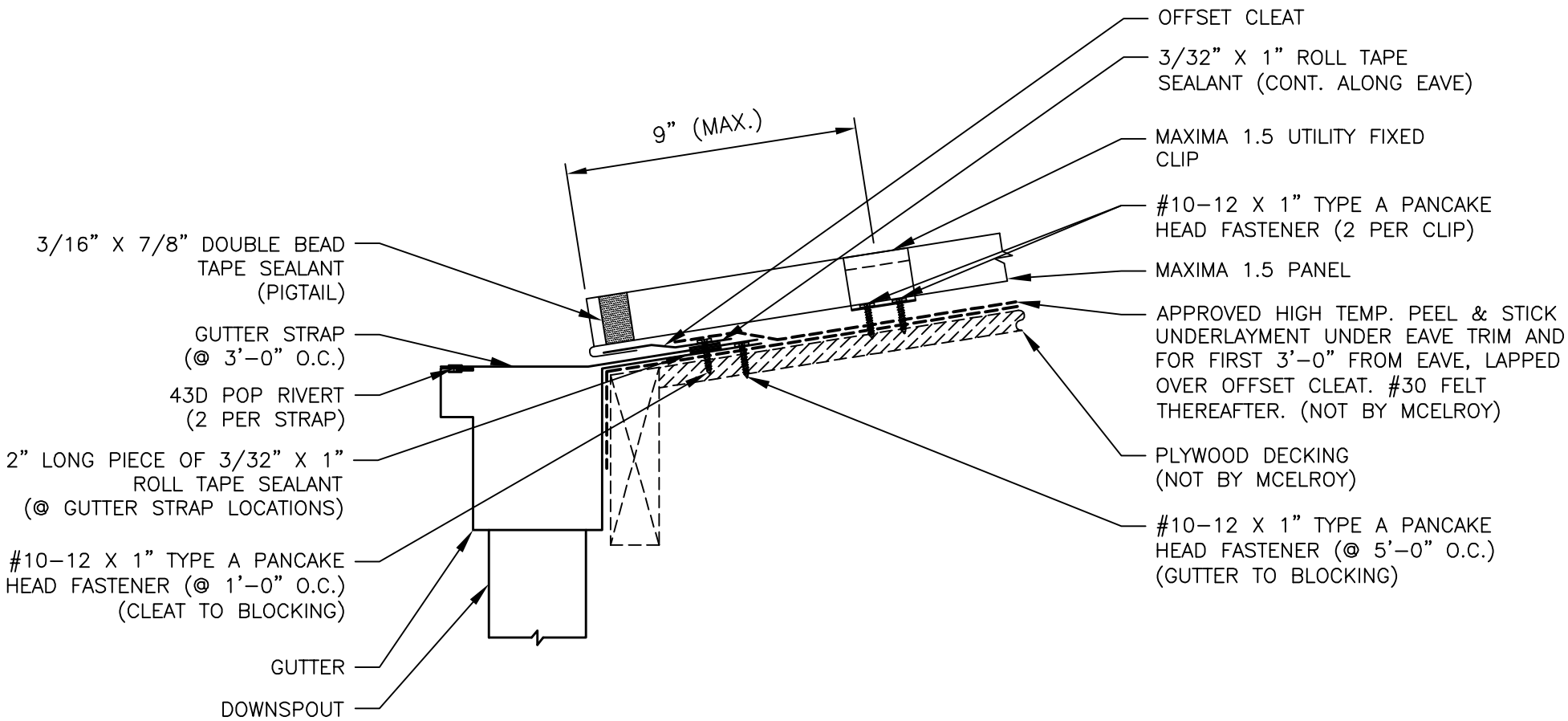

*NOTE: SLIDING SNOW AND ICE COULD CAUSE DAMAGE TO GUTTER SYSTEM.