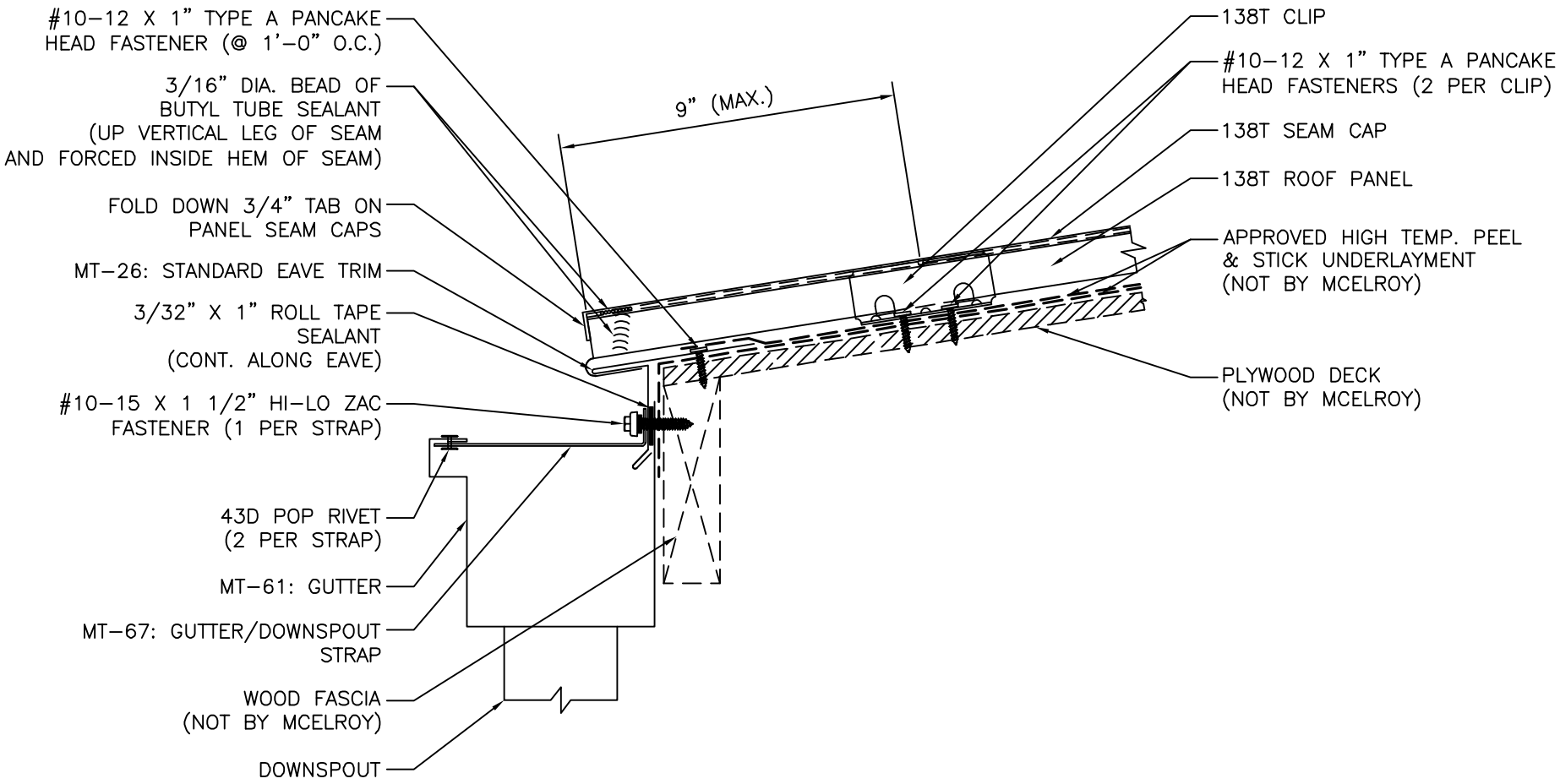


McELROY METAL

# EAVE DRIP with GUTTER DETAIL

ISSUE/REVISION DATE: 06/25/2020

ROOF PANEL: 138T

SUBSTRATE: PLYWOOD

SCALE: N.T.S.