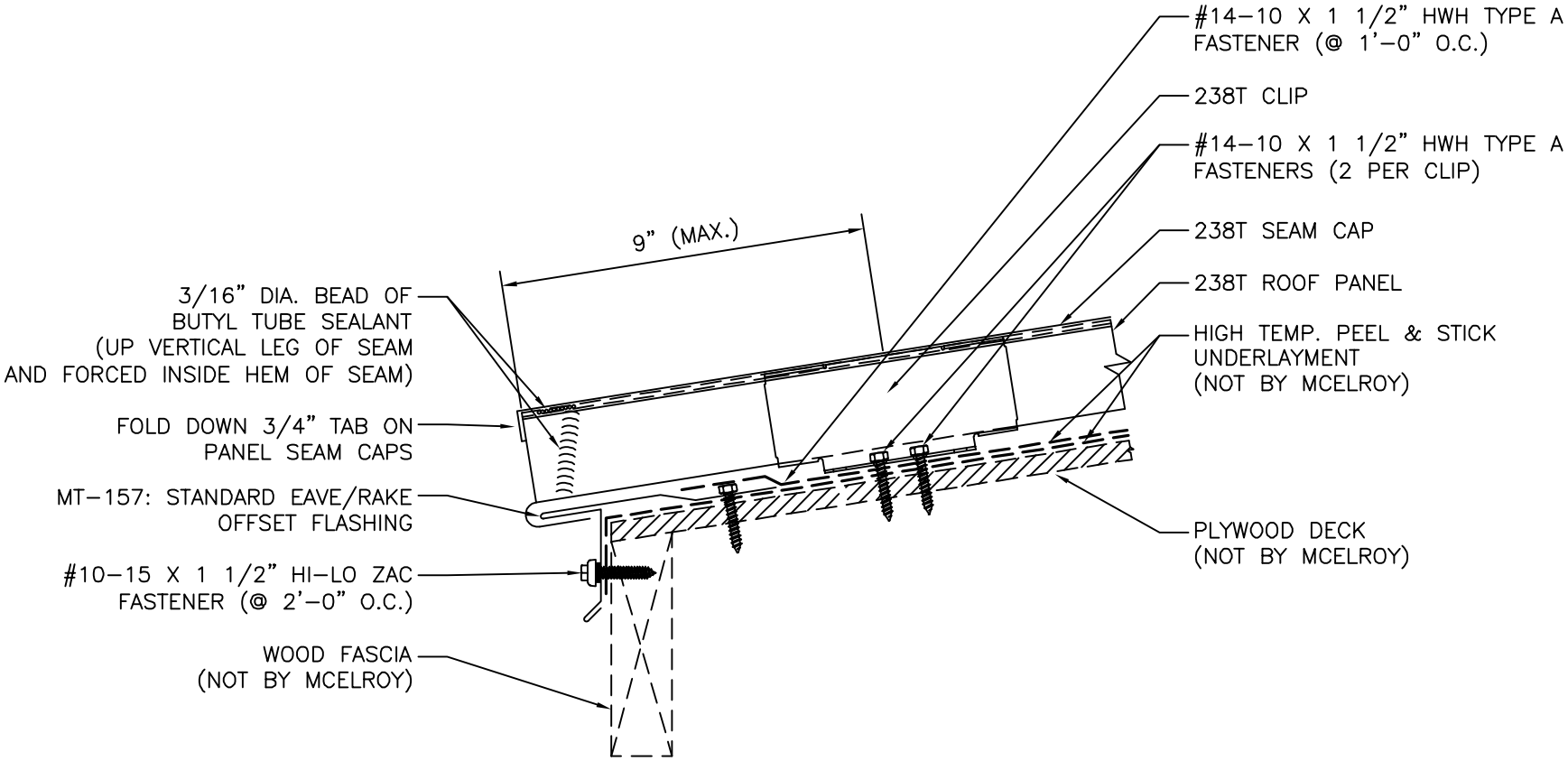

McELROY METAL	EAVE DRIP DETAIL	ISSUE/REVISION DATE: 06/24/2020
	ROOF PANEL: 238T / SUBSTRATE: PLYWOOD	SCALE: N.T.S.