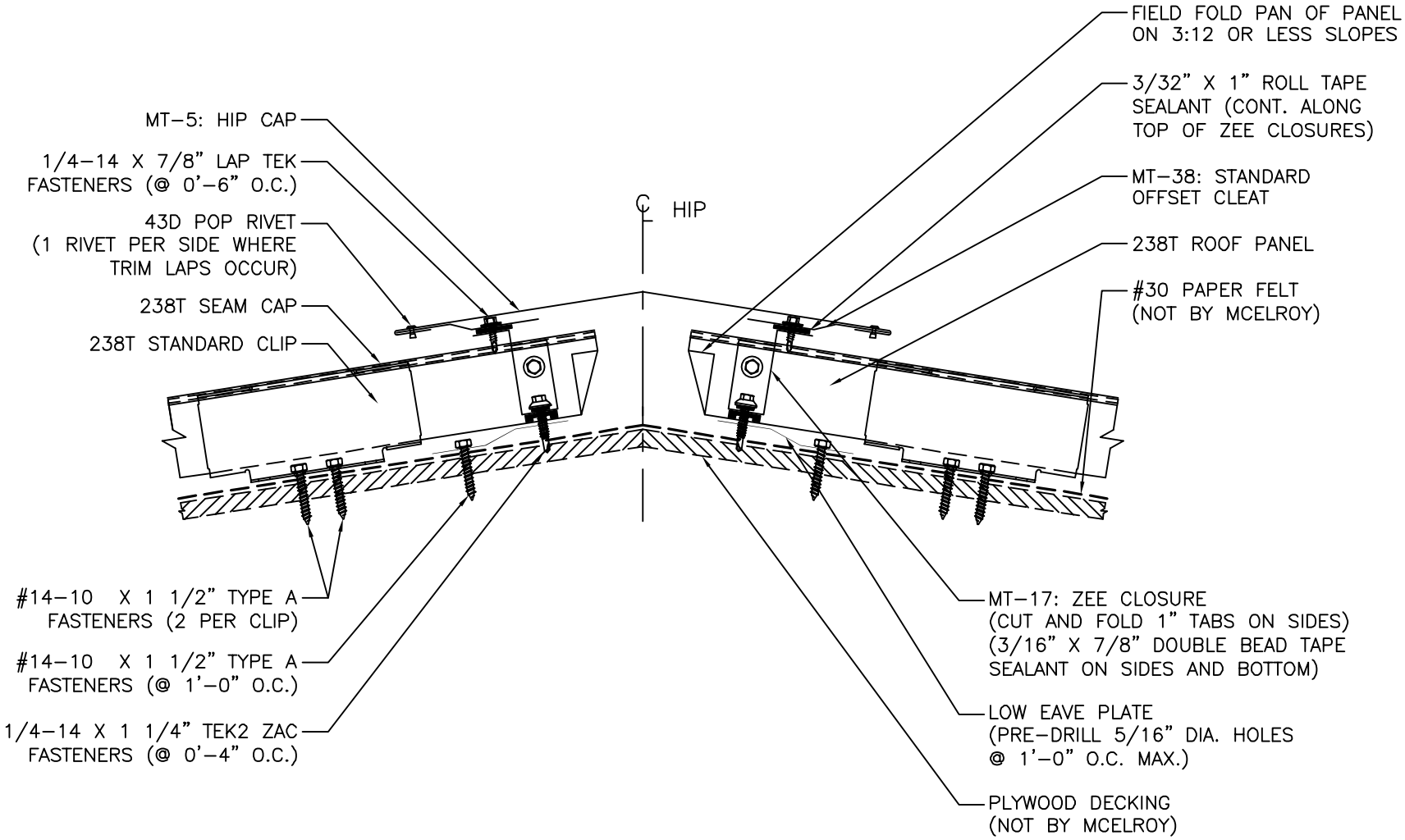


McELROY METAL

# FIXED HIP DETAIL

ISSUE/REVISION DATE: 06/24/2020

ROOF PANEL: 238T

SUBSTRATE: PLYWOOD

SCALE: N.T.S.