5V PANEL

INSTALLATION

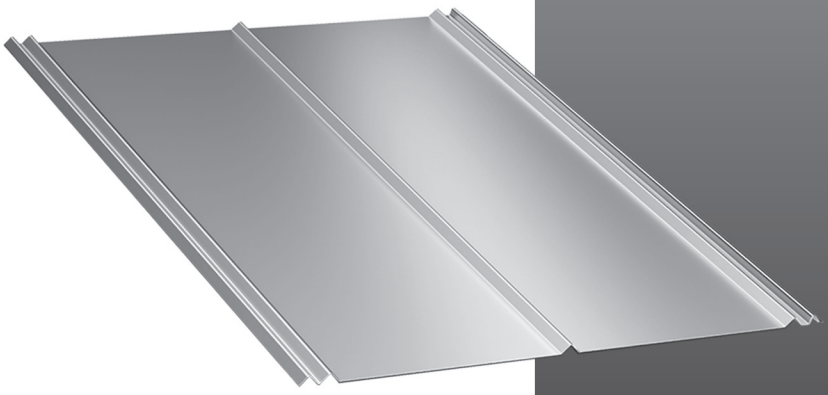

McELROY METAL
Employee Owned

TABLE OF CONTENTS

PAGE NUMBER: DETAIL DESCRIPTION

A-1.....TABLE OF CONTENTS
A-2.....GENERAL NOTES
B-1.....FASTENER PATTERNS
C-1.....EAVE DETAIL
C-2.....EAVE with GUTTER DETAIL
C-3.....RAKE DETAIL
C-4.....RAKE TIE-IN DETAIL
C-5.....RIDGE DETAIL
C-6.....VENTED RIDGE DETAIL
C-7.....HIP DETAIL
C-8.....HIGH EAVE DETAIL
C-9.....HIGH SIDE TIE-IN DETAIL
C-10.....PANEL ENDLAP[DETAIL
C-11.....VALLEY DETAIL
C-12 & C-13.....TYPICAL TRIM LAP DETAILS

GENERAL NOTES

The details shown on the following pages are suggestions or guidelines for installing the 5V roof panel system over plywood. The installation details shown here are proven methods of construction, but they are not intended to cover all building requirements, designs or codes. The details may require changes or revisions due to individual project conditions.

Installation procedures shall be in accordance with the manufacturer's printed instructions, details or approved shop drawings. Installers should thoroughly familiarized themselves with all instructions prior to beginning the installation process.

The designer/installer is responsible to ensure the following:

That the details here meet the particular building requirements.

Awareness of and allowance for expansion/contraction of the roof panels.

That adequate water-tightness is maintained.

That a proper uniform substructure is used to avoid panel distortion and that the substructure meets necessary code requirements.

That all supporting members have been examined and are straight, level and plumb.

McElroy Metal can provide all flashings and accessories shown in the installation drawings unless noted otherwise. Panels, flashing and trim shall be installed true and in proper alignment with any exposed fasteners equally spaced for the best appearance. Sealant shall be field applied on a clean, dry surface.

Some field cutting and fitting of panels and flashings is to be expected and to be considered a part of normal installation work. Workmanship shall be of the best industry standards and with installation performed by experienced metal craftsmen.

Oil canning of metal panels is inherent in metal and is not a cause for rejection. Striated panels are recommended to reduce the appearance of oil canning.

Contents of this manual are subject to change without notice. To confirm this book is the most current copy, please visit McElroy Metal's website at www.mcelroymetal.com.

FASTENER PATTERNS

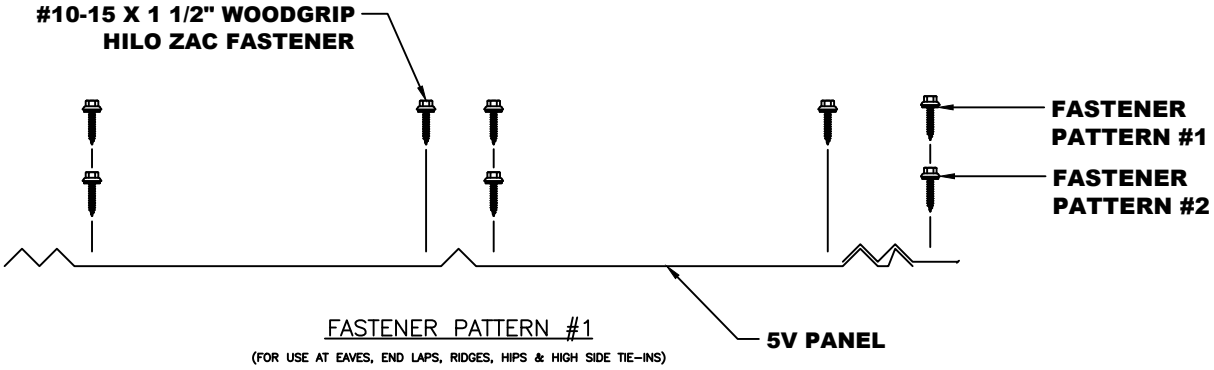

FASTENER PATTERN #1
(FOR USE AT EAVES, END LAPS, RIDGES, HIPS & HIGH SIDE TIE-INS)

FASTENER PATTERN #2
(FOR USE AT INTERMEDIATE FASTENER LOCATION)

PANEL FRAMING AND STITCH FASTENER PATTERNS

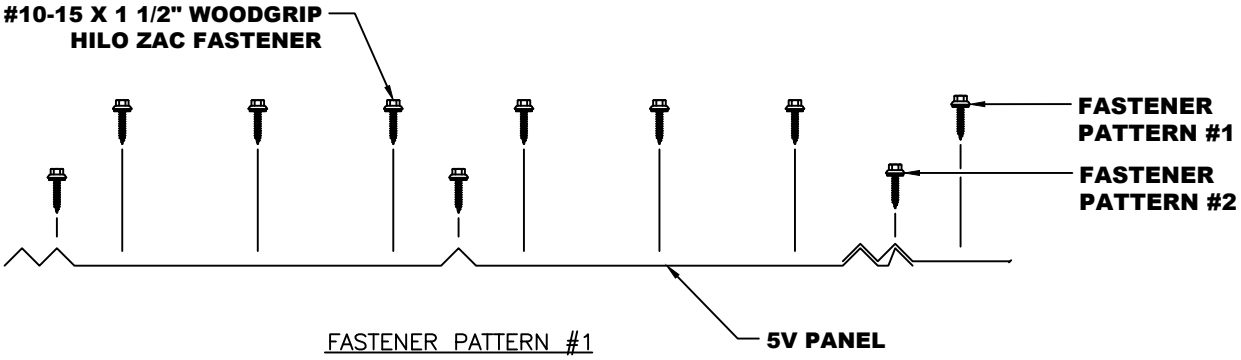

FASTENER PATTERN #1
(FOR USE AT EAVES, END LAPS, RIDGES, HIPS & HIGH SIDE TIE-INS)

FASTENER PATTERN #2
(FOR USE AT INTERMEDIATE FASTENER LOCATION)

ALTERNATE PANEL FRAMING FASTENER PATTERNS

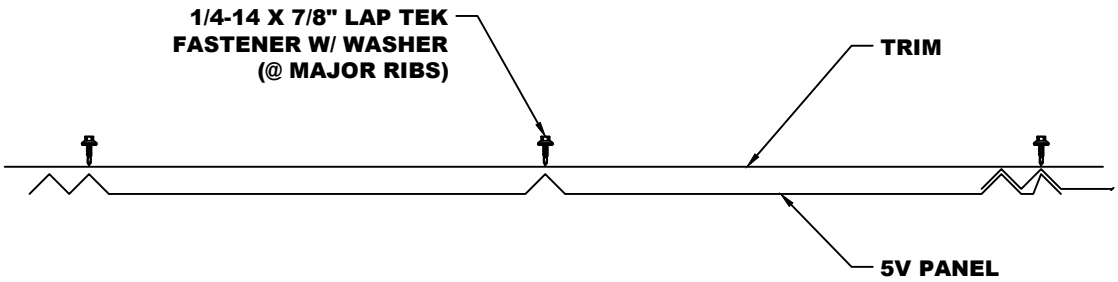

TRIM FASTENER PATTERN

EAVE DETAIL

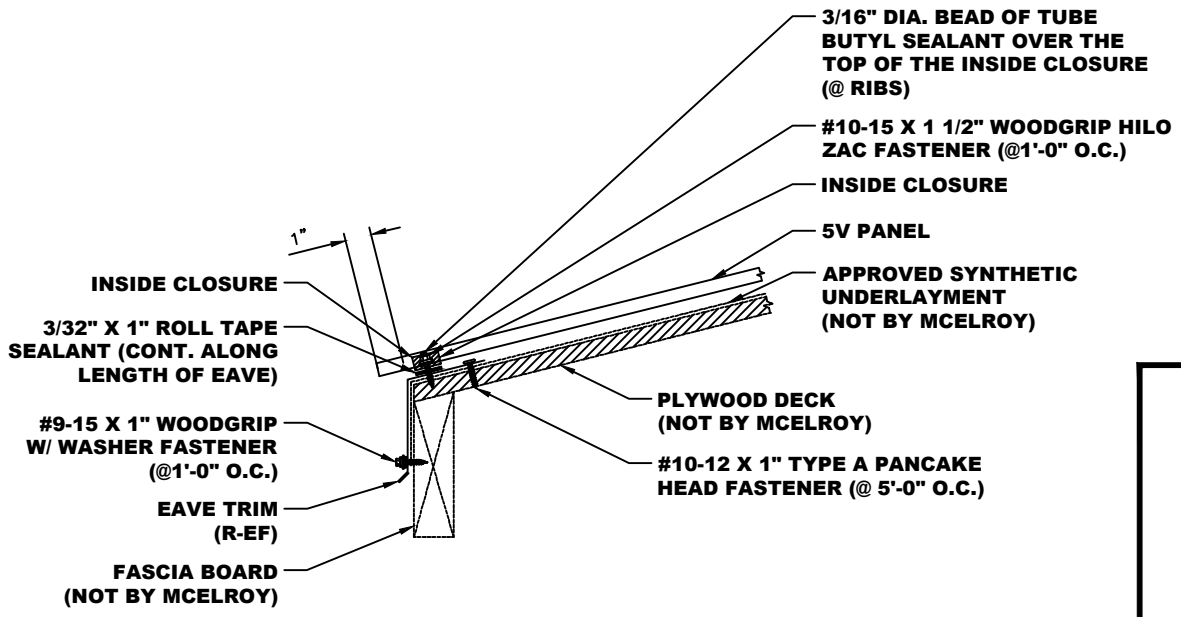

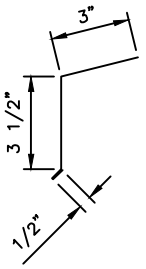

EAVE TRIM

NOTES:
1. Attach Eave Trim to decking with #10-12 x 1" Type A Pancake Head Fasteners at 5'-0" O.C.
2. Apply a continuous bead of 3/32" x 1" Roll Tape Sealant along the length of the Eave. Set Inside Closures on continuous bead of 1" Tape Sealant.
3. Apply a 3/16" diameter bead of Tube Butyl Sealant on top of the Inside Closures at the rib locations.
4. Set 5V Panel in place and attach to decking with #10-15 x 1 1/2" Woodgrip HiLo ZAC Fasteners. See page B-1 for Fastener Patterns.

*NOTE: SOME TRIM ITEMS AND FASTENERS HAVE BEEN REMOVED FOR CLARITY OF ISOMETRIC DETAIL.

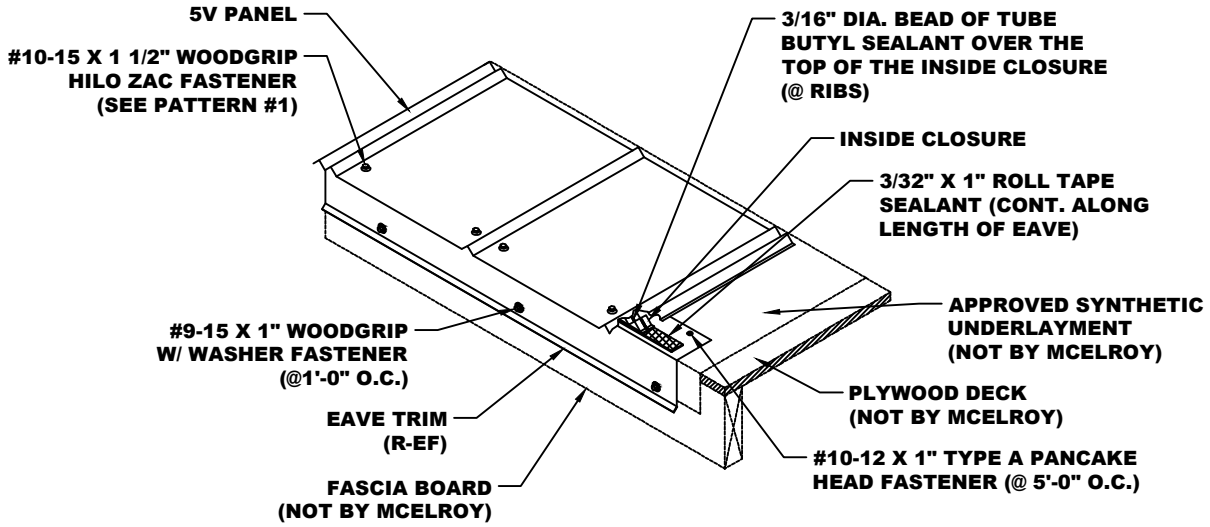

EAVE w/ GUTTER DETAIL

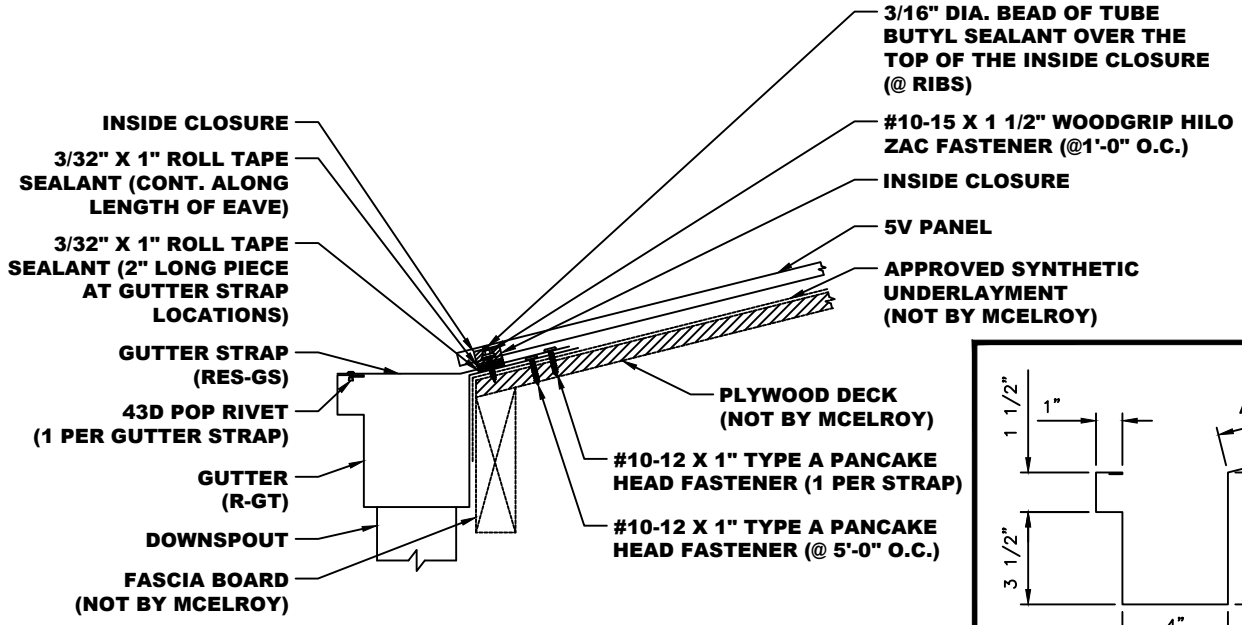

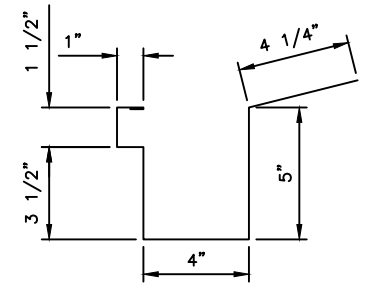

GUTTER

NOTES:
1. Attach Gutter to decking with #10-12 x 1" Type A Pancake Head Fasteners at 5'-0" O.C.
2. Apply a 2" long piece of 3/32" x 1" Roll Tape Sealant on Gutter Flange where Gutter Straps will be located. Attached Gutter Straps to Gutter with a 43D Pop Rivet. Field bend Strap so it goes under 5V Panel and attach Gutter Straps to decking with one (1) #10-12 x 1" Type A Pancake Head Fasteners .
3. Apply a continuous strip of 3/32" x 1" Roll Tape Sealant over top of 2" strips and Gutter Straps along the length of the eave and then set Inside Closures onto strip of Tape Sealant.
4. Apply a 3/16" diameter bead of Tube Butyl Sealant on top of the Inside Closures at the rib locations.
5. Set 5V Panel in place and attach to decking with #10-15 x 1 1/2" Woodgrip HiLo ZAC Fasteners. See page B-1 for Fastener Patterns.

*NOTE: SOME TRIM ITEMS AND FASTENERS HAVE BEEN REMOVED FOR CLARITY OF ISOMETRIC DETAIL.

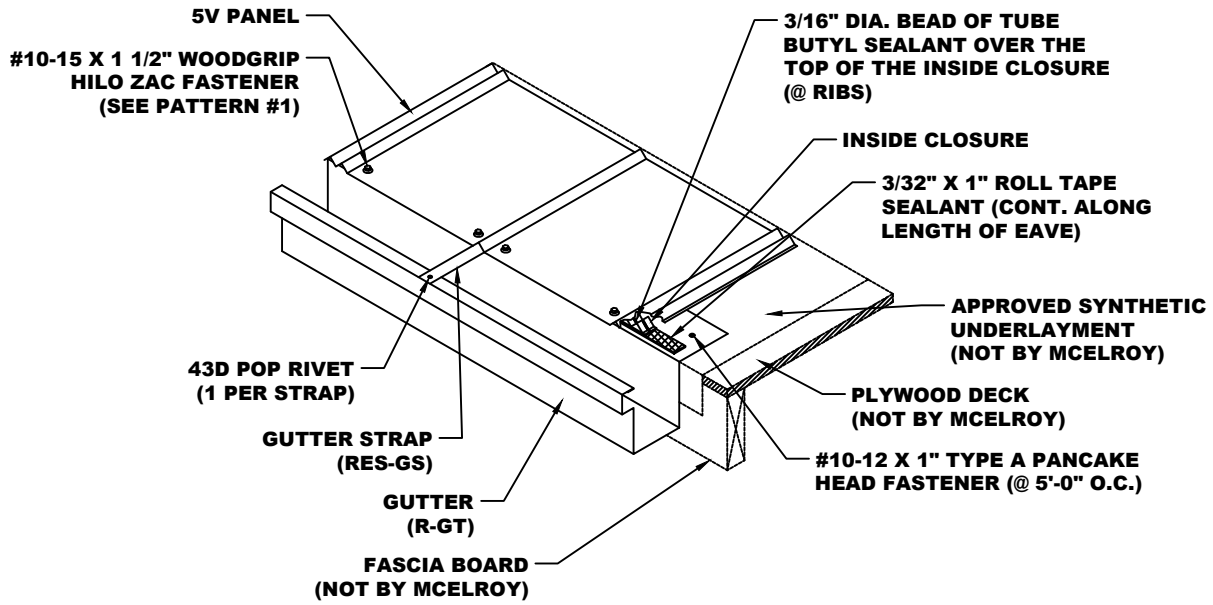

RAKE DETAIL

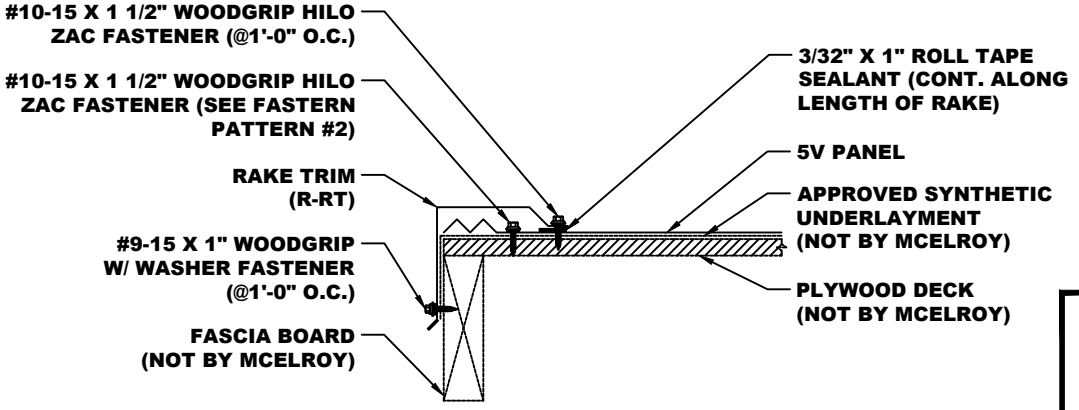

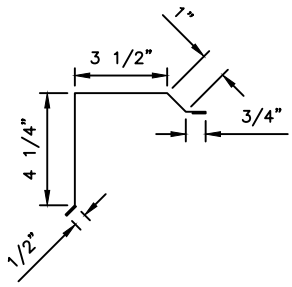

RAKE TRIM

NOTES:
1. **After completing all the Eave Detail requirements, install the 5-V Panel with #10-15 x 1 1/2" Woodgrip HILO ZAC Fasteners per the required fastener spacing and pattern #2.**
2. **Apply a continuous bead of 3/32" x 1" Roll Tape Sealant along the length of the Rake Trim and then place the Rake Trim in position as shown and attach with #10-15 x 1 1/2" Woodgrip HILO ZAC Fasteners at 1'-0" O.C. making sure the fastener goes thru the Tape Sealant.**
3. **Attach the Rake Trim to the Fascia Board with #9-15 x 1" Woodgrip w/ Washer Fasteners at 1'-0" O.C.**

*NOTE: SOME TRIM ITEMS AND FASTENERS HAVE BEEN REMOVED FOR CLARITY OF ISOMETRIC DETAIL.

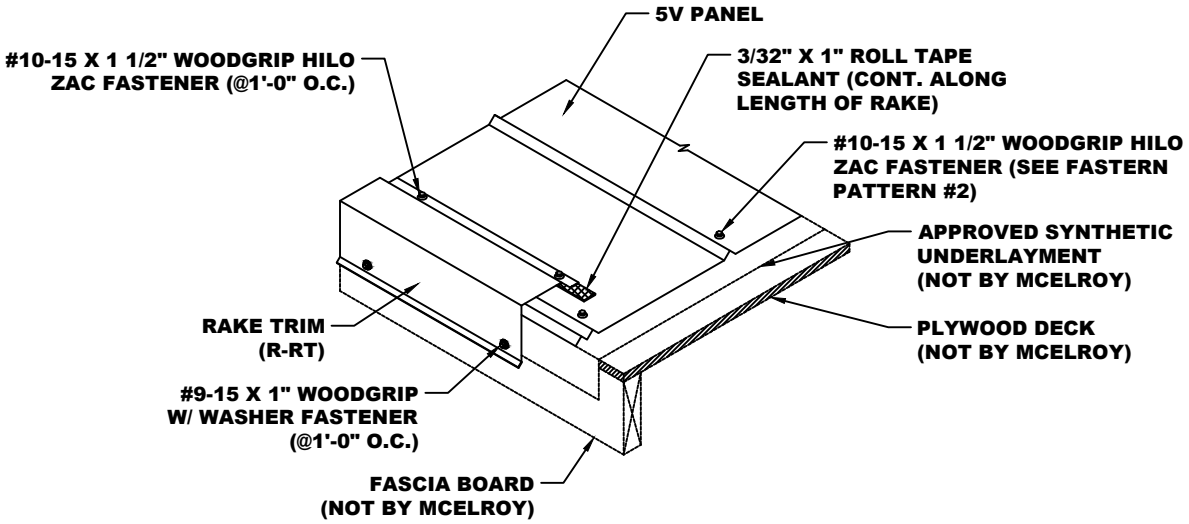

RAKE TIE-IN DETAIL

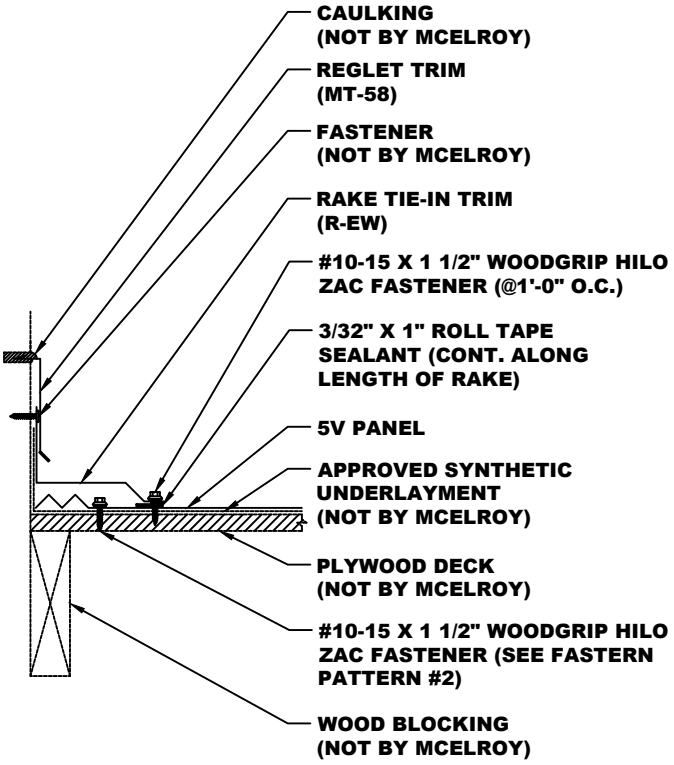

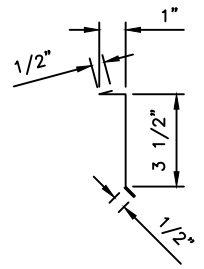

REGLET TRIM
(MT-58)

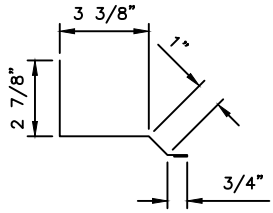

RAKE TIE-IN TRIM

NOTES:
1. **After completing all the Eave Detail requirements, install the 5-V Panel with #10-15 x 1 1/2" Woodgrip HILO ZAC Fasteners per the required fastener spacing and pattern #2.**
2. **Apply a continuous bead of 3/32" x 1" Roll Tape Sealant along the length of the Rake Tie-In Trim and then place the Rake Tie-In Trim in position as shown. Attach with #10-15 x 1 1/2" Woodgrip HILO ZAC Fasteners at 1'-0" O.C. making sure the fastener goes thru the Tape Sealant. Attach Rake Tie-In Trim to end wall with Fasteners (not by McElroy). Install Reglet Trim (MT-58) as shown and seal with Caulking.**
3. **Attach the Rake Trim to the Fascia Board with #9-15 x 1" Woodgrip w/ Washer Fasteners at 1'-0" O.C.**

*NOTE: SOME TRIM ITEMS AND FASTENERS HAVE BEEN REMOVED FOR CLARITY OF ISOMETRIC DETAIL.

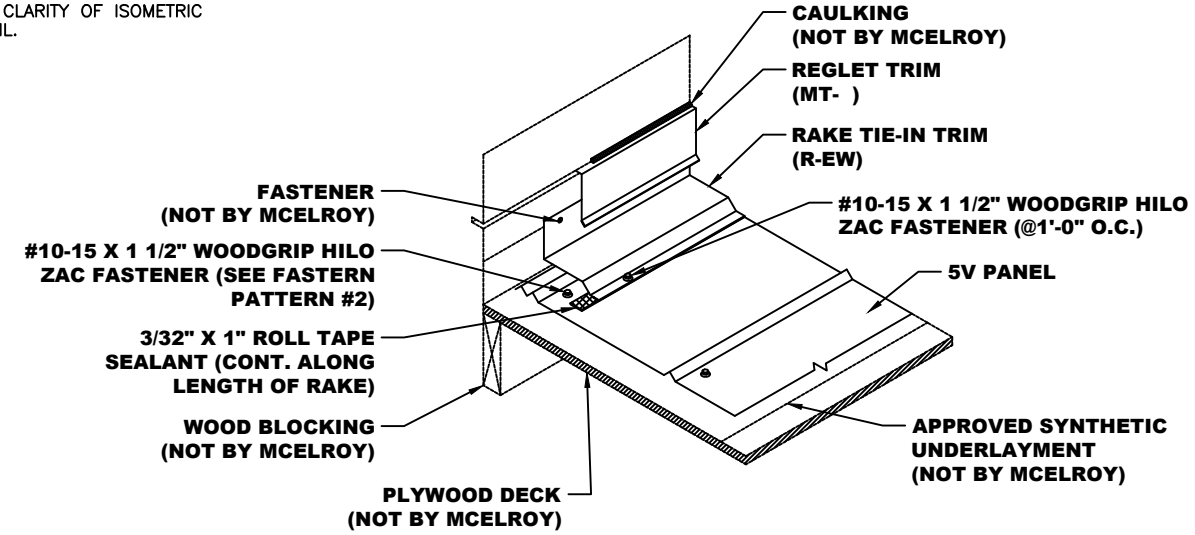

RIDGE DETAIL

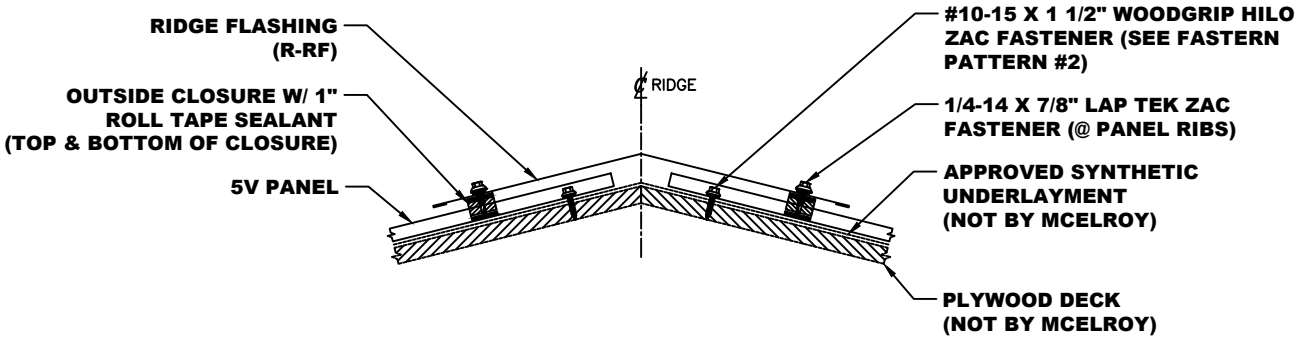

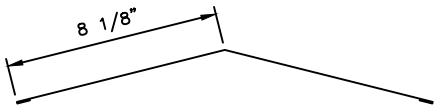

RIDGE FLASHING

NOTES:
1. **Install the 5V Panels 1" downhill of each side of the ridge. Attach with #10-15 x 1 1/2" Woodgrip HILO ZAC Fasteners per the required fastener spacing and pattern.**
2. **Apply a continuous bead of 3/32" x 1" Roll Tape Sealant on the panels along the length of the ridge and and then place Outside Closures in sealant. Apply another continuous bead of 3/32 x 1" Roll Tape Sealant on top of the Outside Closures along the length of the Ridge.**
3. **Attach the Ridge Flashing as shown with 1/4-14 x 7/8" Lap Tek Fasteners w/ Washer to each major rib of the 5-V Panel.**

*NOTE: SOME TRIM ITEMS AND FASTENERS HAVE BEEN REMOVED FOR CLARITY OF ISOMETRIC DETAIL.

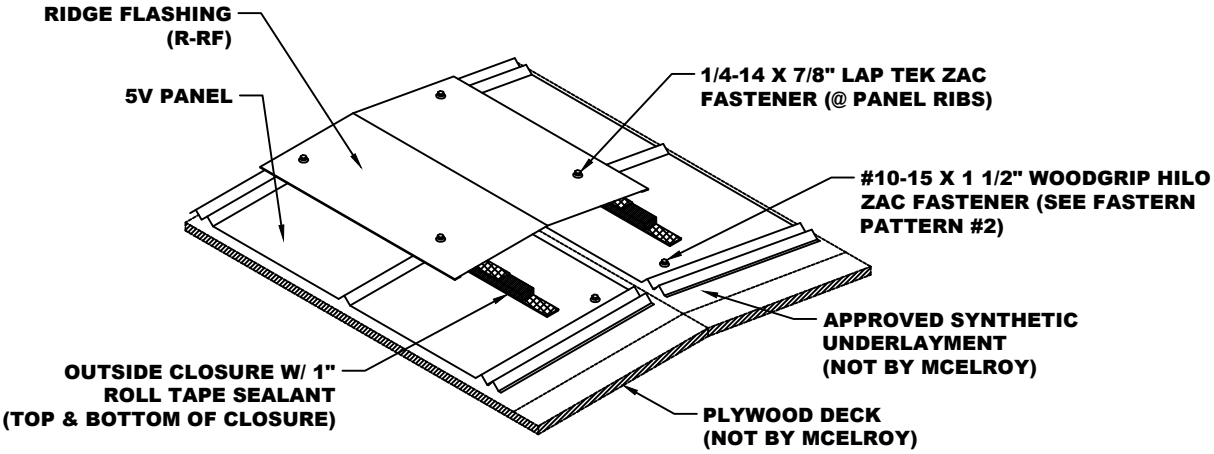

VENTED RIDGE DETAIL

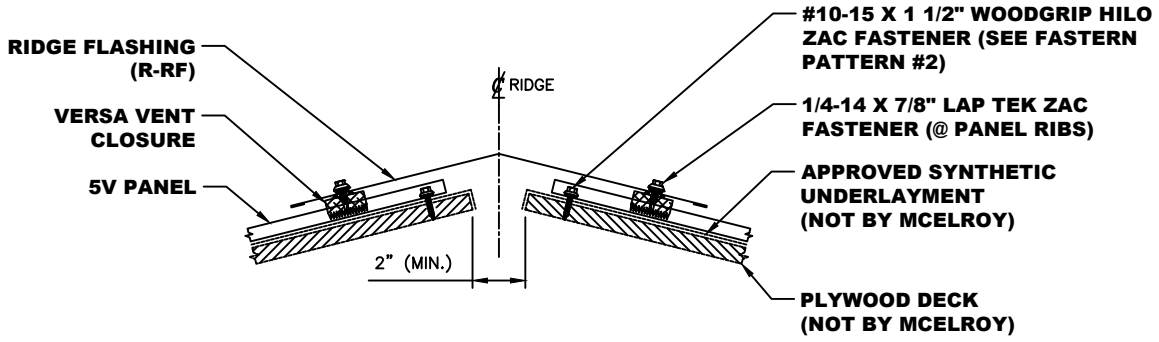

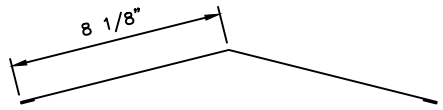

RIDGE FLASHING

NOTES:
1. **Install the 5V Panels 1" downhill of each side of the ridge. Attach with #10-15 x 1 1/2" Woodgrip HILO ZAC Fasteners per the required fastener spacing and pattern.**
2. **Adhere Versa Vent Closure to the underside of the Ridge Flashing by exposing the adhesive strip. Position Versa Vent Closure as shown.**
3. **Attach the Ridge Flashing as shown with 1/4-14 x 7/8" Lap Tek Fasteners w/ Washer to each major rib of the 5-V Panel.**

*NOTE: SOME TRIM ITEMS AND FASTENERS HAVE BEEN REMOVED FOR CLARITY OF ISOMETRIC DETAIL.

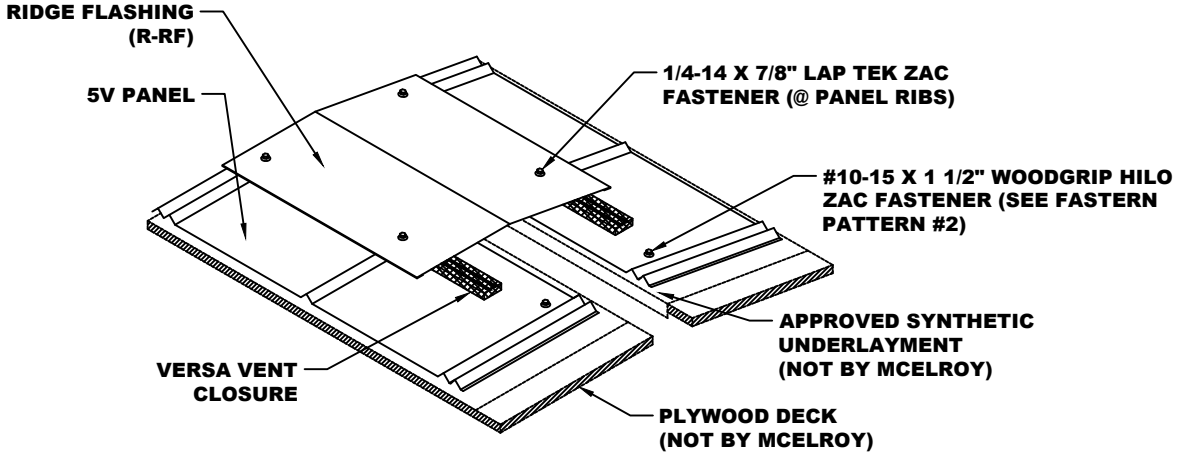

HIP DETAIL

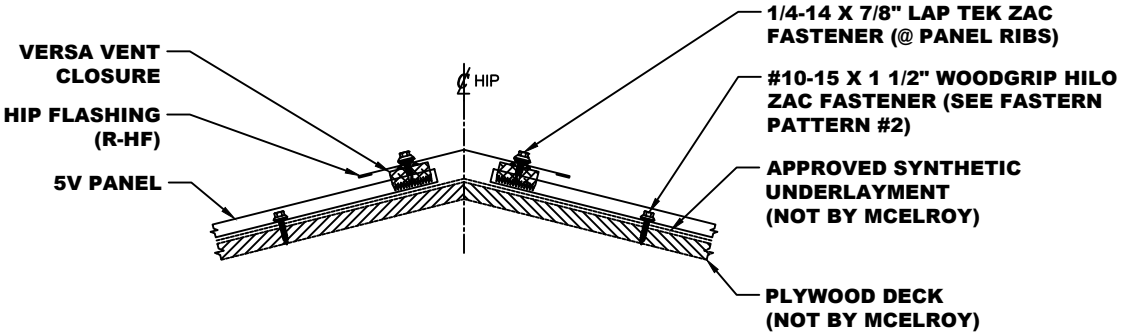

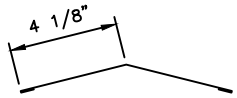

HIP FLASHING

NOTES:
1. **Install the 5V Panels 1" downhill of each side of the ridge. Attach with #10-15 x 1 1/2" Woodgrip HILO ZAC Fasteners per the required fastener spacing and pattern.**
2. **Adhere Versa Vent Closure to the underside of the Hip Flashing by exposing the adhesive strip. Position Versa Vent Closure as shown.**
3. **Attach the Hip Flashing as shown with 1/4-14 x 7/8" Lap Tek Fasteners w/ Washer to each major rib of the 5-V Panel.**

*NOTE: SOME TRIM ITEMS AND FASTENERS HAVE BEEN REMOVED FOR CLARITY OF ISOMETRIC DETAIL.

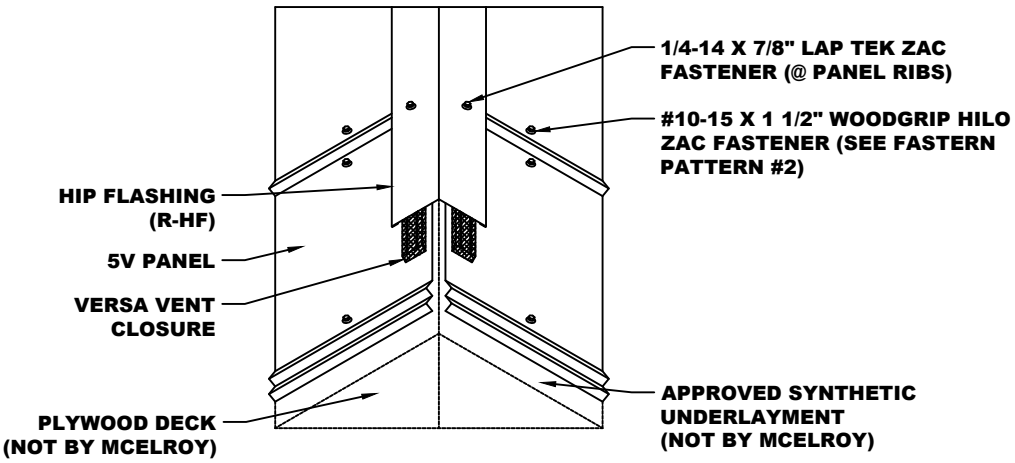

HIGH EAVE DETAIL

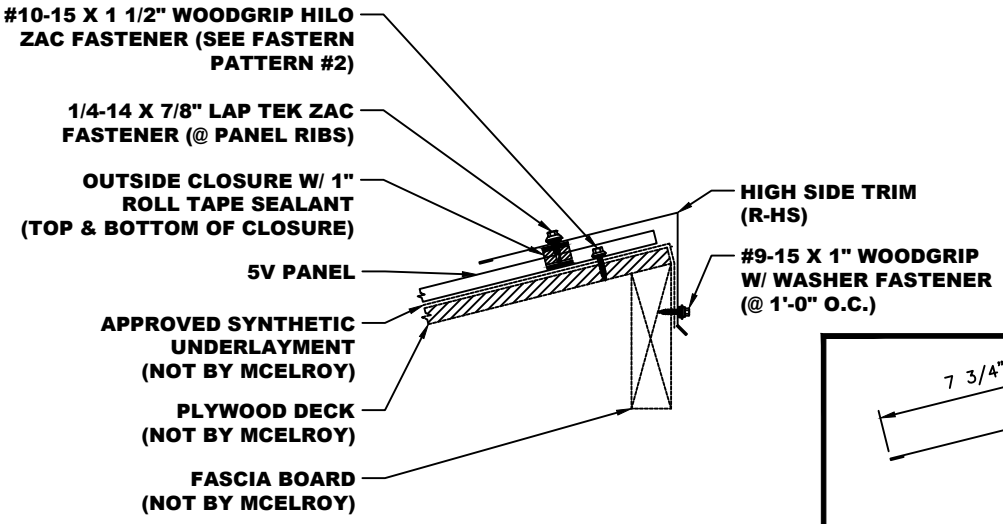

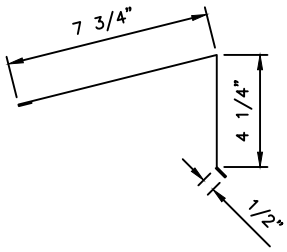

HIGH SIDE TRIM

NOTES:
1. **Install the 5V Panels 1" downhill of each side of the ridge. Attach with #10-15 x 1 1/2" Woodgrip HILO ZAC Fasteners per the required fastener spacing and pattern.**
2. **Apply a continuous bead of 3/32" x 1" Roll Tape Sealant on the panels along the length of the eave and and then place Outside Closures in sealant. Apply another continuous bead of 3/32 x 1" Roll Tape Sealant on top of the Outside Closures along the length of the eave.**
3. **Attach the High Side Flashing as shown with 1/4-14 x 7/8" Lap Tek Fasteners w/ Washer to each major rib of the 5-V Panel.**

*NOTE: SOME TRIM ITEMS AND FASTENERS HAVE BEEN REMOVED FOR CLARITY OF ISOMETRIC DETAIL.

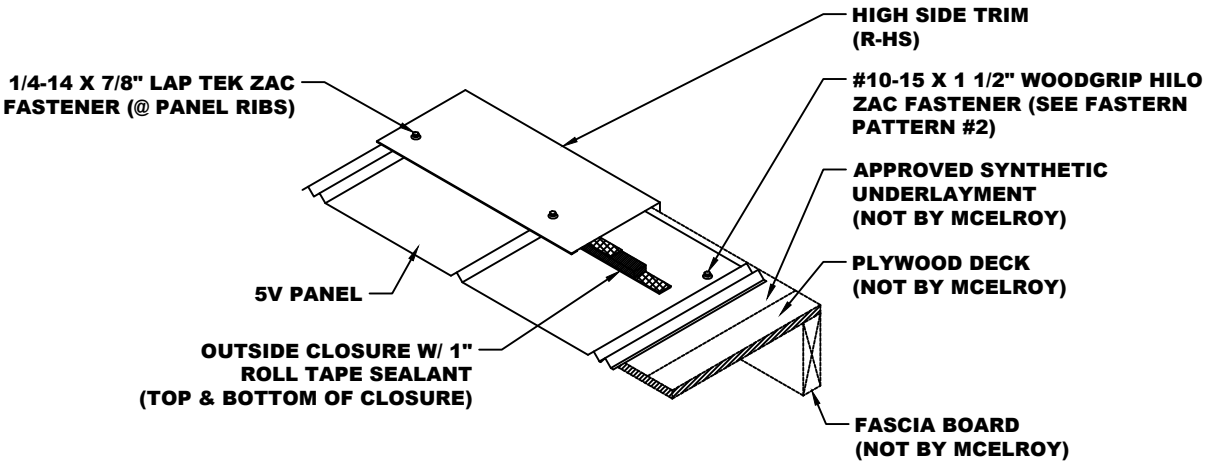

HIGH SIDE TIE-IN DETAIL

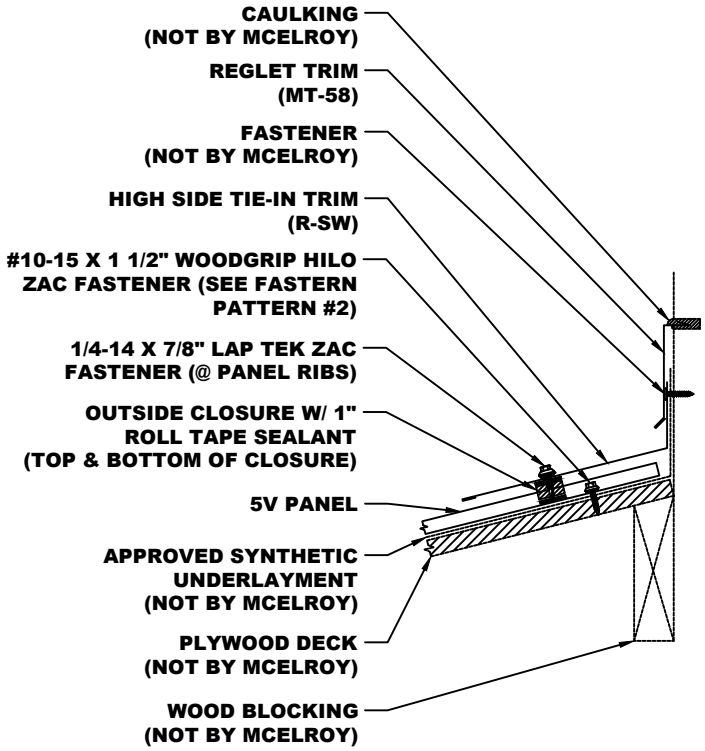

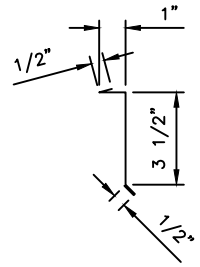

REGLET TRIM
(MT-58)

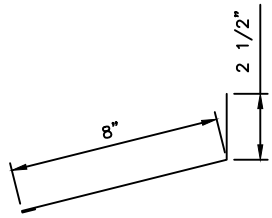

HIGH SIDE TIE-IN TRIM

NOTES:
1. **Install the 5V Panels 1" downhill of each side of the headwall. Attach with #10-15 x 1 1/2" Woodgrip HILO ZAC Fasteners per the required fastener spacing and pattern.**
2. **Apply a continuous bead of 3/32" x 1" Roll Tape Sealant on the panels along the length of the headwall and then place Outside Closures in sealant. Apply another continuous bead of 3/32 x 1" Roll Tape Sealant on top of the Outside Closures along the length of the headwall.**
3. **Attach the High Side Tie-In Trim as shown with 1/4-14 x 7/8" Lap Tek Fasteners w/ Washer to each rib of the 5-V Panel. Attache High Side Tie-In Trim to headwall with Fasteners (not by McElroy). Install Reglet Trim (MT-58) as shown and seal with Caulking.**

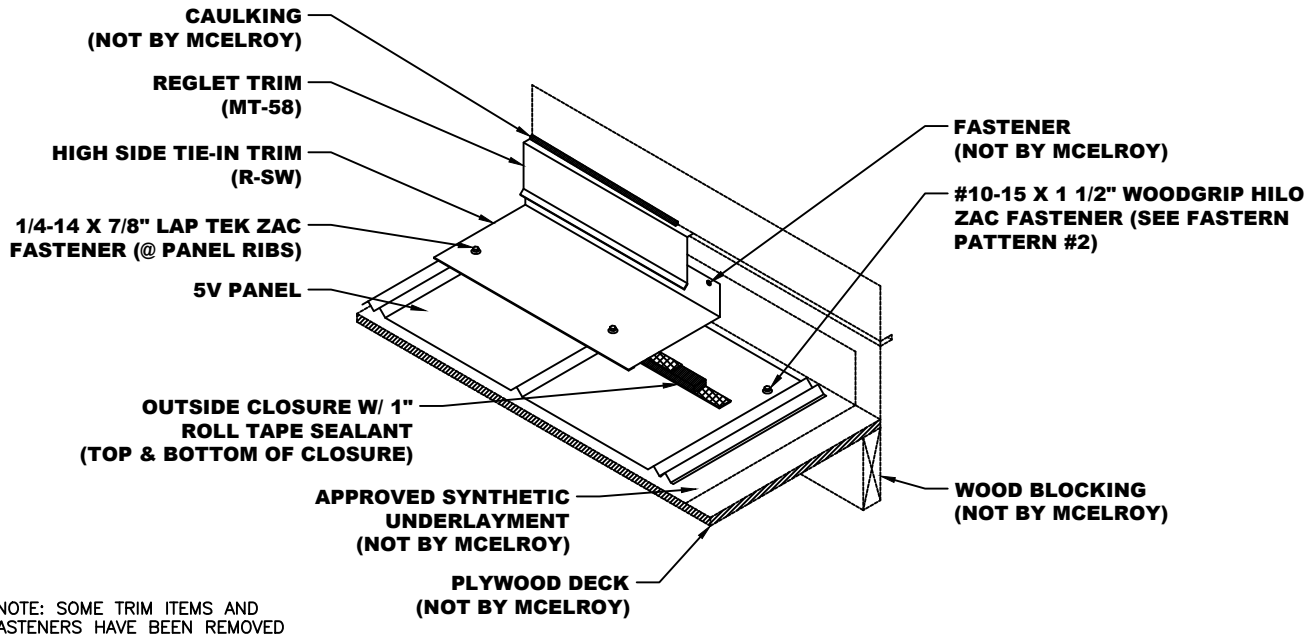

*NOTE: SOME TRIM ITEMS AND FASTENERS HAVE BEEN REMOVED FOR CLARITY OF ISOMETRIC DETAIL.

PANEL ENDLAP DETAIL

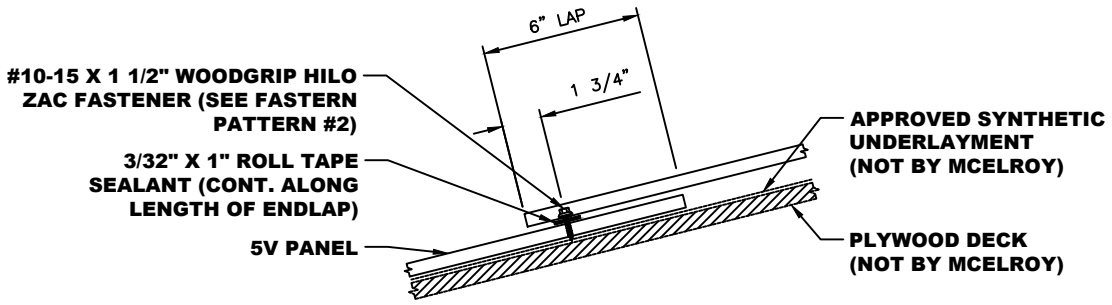

NOTES:
1. **Install the lower 5V Panels as required and attach with #10-15 x 1 1/2" Woodgrip HILO ZAC Fasteners per the required fastener spacing and pattern.**
2. **Apply a continuous bead of 3/32" x 1" Roll Tape Sealant on the panels along the length of the endlap 4" down for the end of the panel.**
3. **Lay upper 5V Panel in panel and attach with #10-15 x 1 1/2" Woodgrip HILO ZAC Fasteners per the required fastener spacing and pattern.**

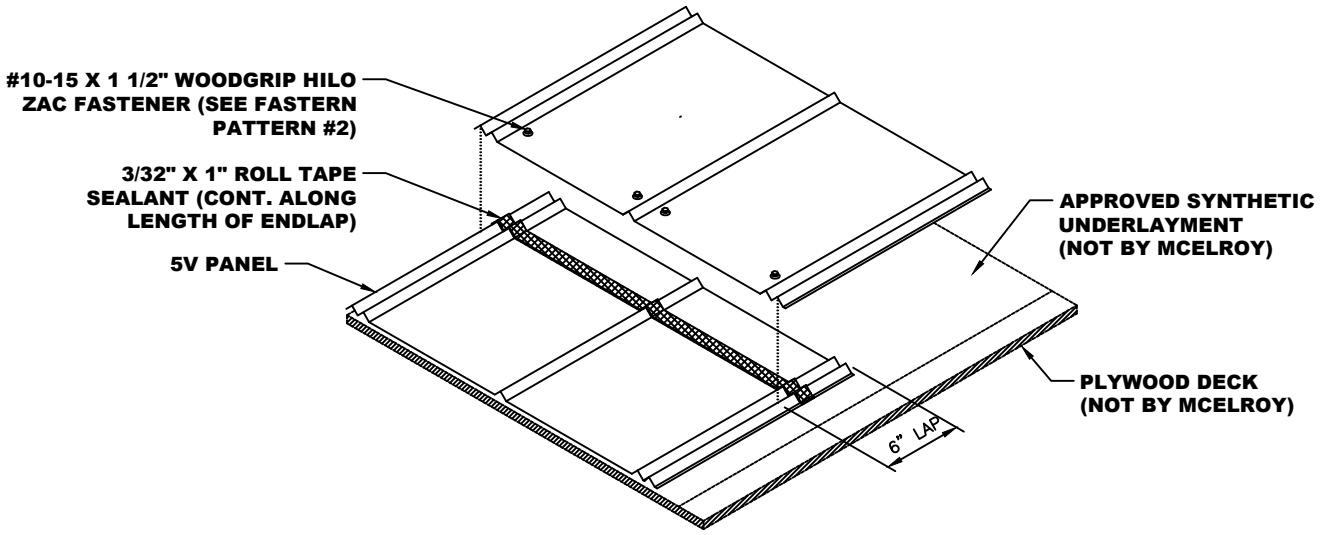

*NOTE: SOME TRIM ITEMS AND FASTENERS HAVE BEEN REMOVED FOR CLARITY OF ISOMETRIC DETAIL.

VALLEY DETAIL

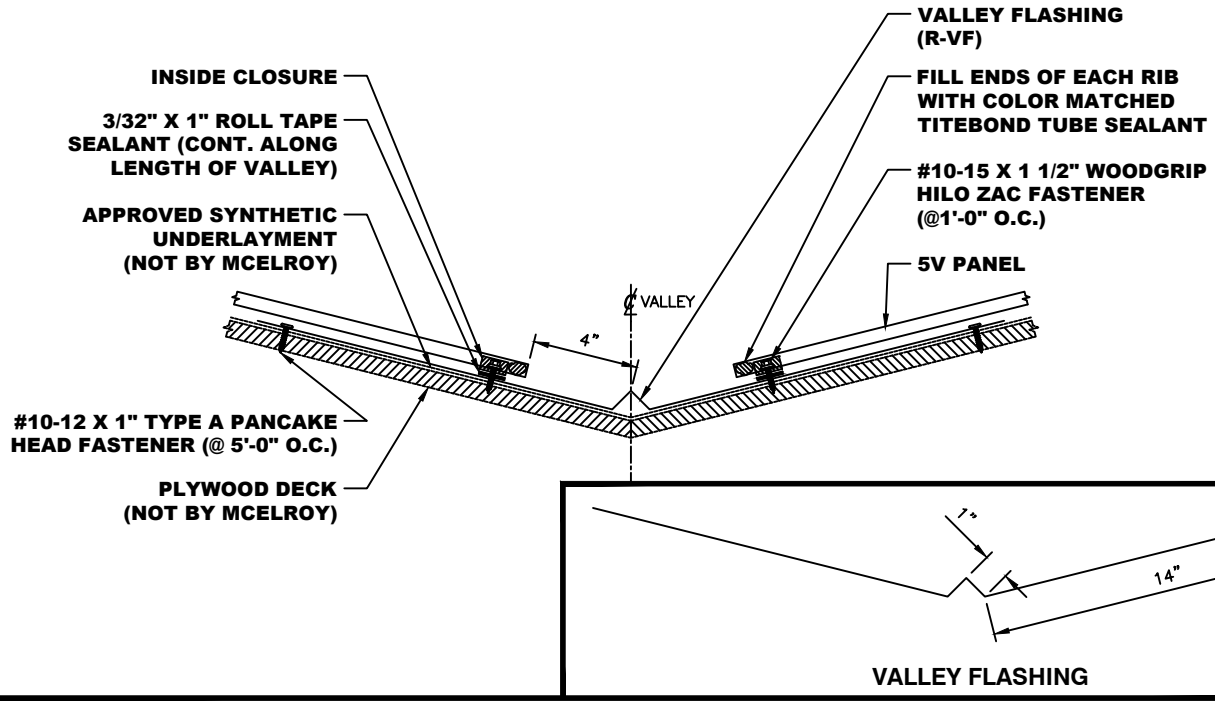

NOTES:
1. **Install the Valley Trim as shown and attach with #10-12 x 1" Type A Pancake Head Fasteners at 5'-0" O.C.**
2. **Apply a continuous bead of 1" Tape Sealant to the Valley Trim. Then set the Inside Closures onto the tape sealant. When you get to a panel rib, you will have to break Inside Closure and align rib portion of closure so it seals the rib.**
3. **Field cut the 5-V Panels to the correct valley angle and set in place as shown. Attach with #10-15 x 1 1/2" Woodgrip HILO ZAC Fasteners per the fastener pattern.**
4. **Fill ends of panel ribs with color matched Titebond Tube Sealant.**

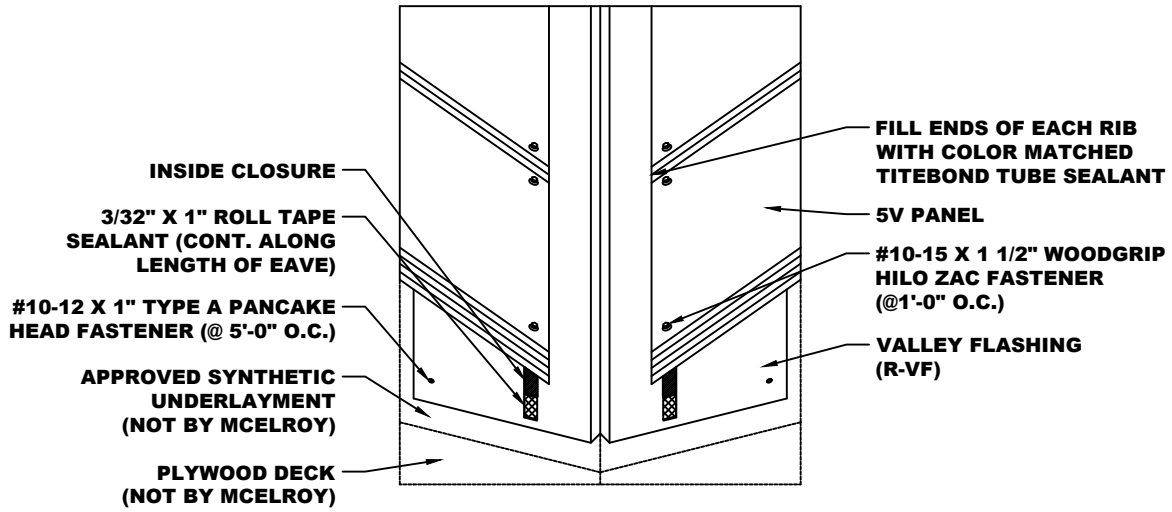

*NOTE: SOME TRIM ITEMS AND FASTENERS HAVE BEEN REMOVED FOR CLARITY OF ISOMETRIC DETAIL.

TYPICAL TRIM LAP DETAIL

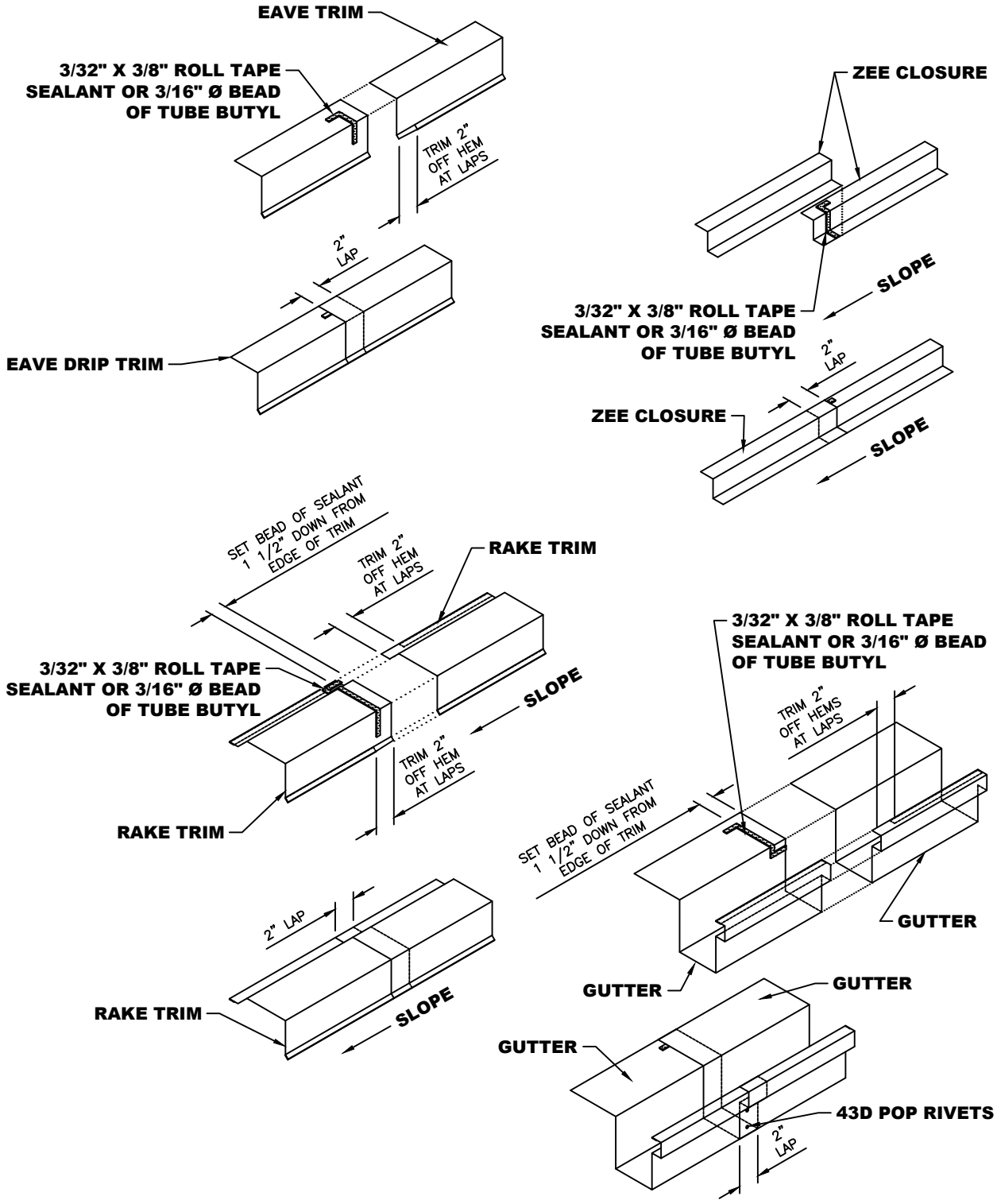

NOTE: 1. Apply specified Roll Tape Sealant or a 3/16" Ø bead of Tube Butyl 1 1/2" back from the edge of the trim. Also, apply a piece of tape sealant or bead of Tube Butyl as a Pigtail to completely seal joint.
2. Notch the hems on the upper trim piece 2" so that the trim will fit flat in the lap joint.
3. Secure trim laps with Pop Rivets as shown above.

TYPICAL TRIM LAP DETAIL

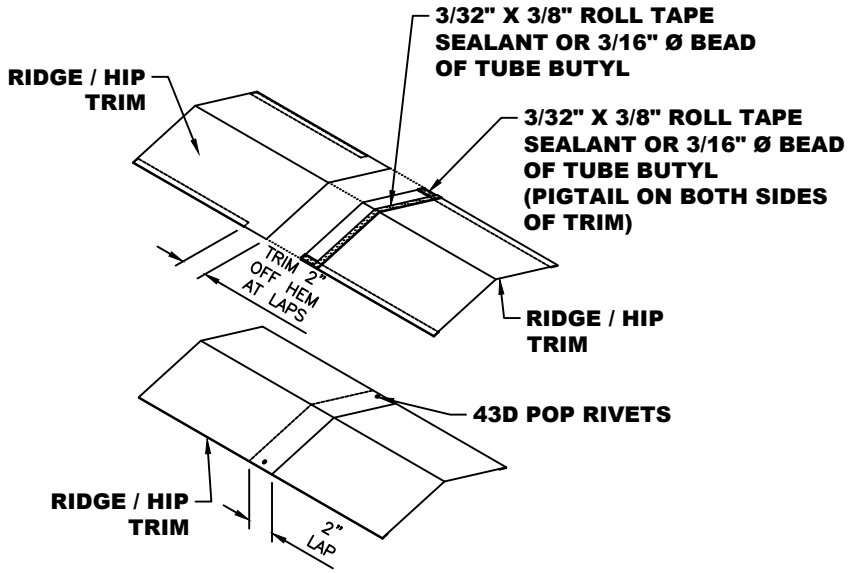

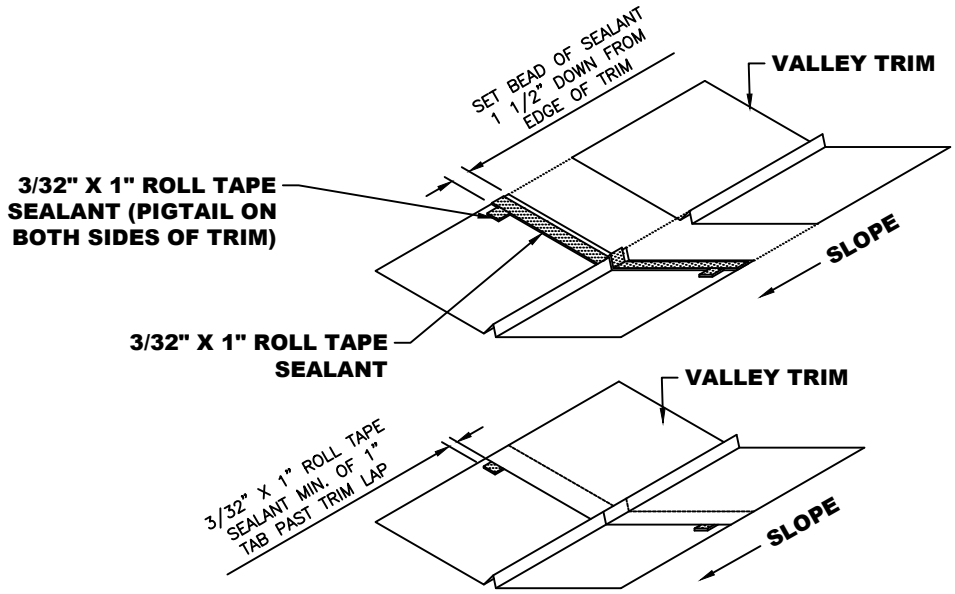

NOTE: 1. Apply specified Roll Tape Sealant or a 3/16" Ø bead of Tube Butyl 1 1/2" back from the edge of the trim. Also, apply a piece of tape sealant or bead of Tube Butyl as a Pigtail to completely seal joint.
2. Notch the hems on the upper trim piece 2" so that the trim will fit flat in the lap joint.
3. Secure trim laps with Pop Rivets as shown above.

McELROY METAL
Employee Owned

☆ MANUFACTURING LOCATIONS ● SERVICE CENTERS ★ MANUFACTURING AND SERVICE CENTER

CORPORATE OFFICE
1500 HAMILTON RD.
BOSSIER CITY, LA 71111

MANUFACTURING LOCATIONS

ADELANTO, CA **ASHBURN, GA** **BOSSIER CITY, LA** **CLINTON, IL** **DIAMOND, MO**

HOUSTON, TX **LEWISPORT, KY** **LOCKHART, TX** **MARSHALL, MI** **MAUSTON, WI**

MERKEL, TX **PEACHTREE CITY, GA** **SUNNYVALE, TX** **WINCHESTER, VA**

McELROY METAL
SERVICE
CENTER
EMPLOYEE OWNED

17031 Koala Road
Adelanto, CA 92301

3052 Yadkin Road
Chesapeake, VA 23323

409 Lovejoy Road
Ft. Walton Beach, FL 32548

221 Benelli Drive
Hutto, TX 78634

2701 Cahill Street
Lockhart, TX 78644

1220 Rockpebble Ave
North Las Vegas, NV 89030

8511 Industrial Drive
Pearland, TX 77584

1365 Dean Forest Rd.
Savannah, GA 31405

5215 Leo St.
Alexandria, LA 71301

9476 Meadowbrook Rd.
Clinton, IL 61727

3014 Lincoln Court
Garland, TX 75041

10504 E. 59th Street
Indianapolis, IN 46236

1020 Veterans Street
Mauston, WI 53948

8304 Hwy. 70 E.
North Little Rock, AR 72117

2755 Hwy 60
Pendergrass, GA 30567

7355 Oakley Industrial Blvd.
Union City, GA 30291

1007 Wilso Dr,
Baltimore, MD 21223

3215 Highway 59
Diamond, MO 64840

4152 May St.
Hillside, IL 60162

32 Industrial Circle
Lancaster, PA 17601

5123 Terminal Dr.
McFarland, WI 53558

2473 Silver Star Road
Orlando, FL 32804

7450 Tower Street
Richland Hills, TX 76118

1144 Silstar Rd.
West Columbia, SC 29170

1500 Hamilton Rd.
Bossier City, LA 71111

390 N. Valley Dell Dr.
Fenton, MO 63026

1440 Aldine Bender Road
Houston, TX 77032

9435 US Hwy. 60 W.
Lewisport, KY 42351

514 Cave Road
Nashville, TN 37210

613 North Bierdeman Rd.
Pearl, MS 39208

8200 Berry Ave. Suite 100
Sacramento, CA 95828

325 McGhee Rd.
Winchester, VA 22603

Website: www.mcelroymetal.com · E-mail: info@mcelroymetal.com