DEKTITE DETAIL

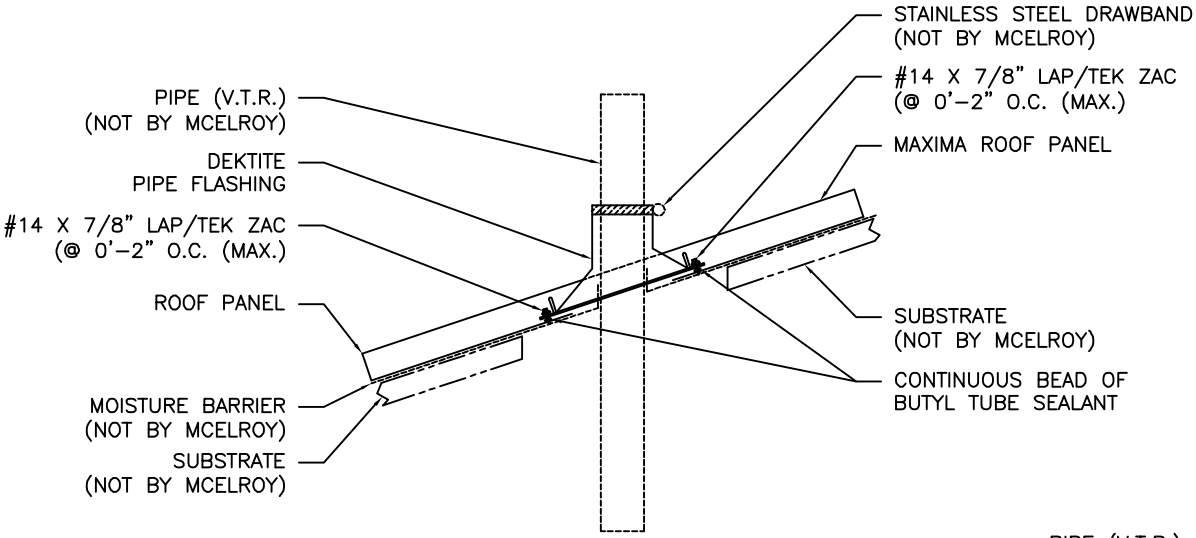

SECTION A1

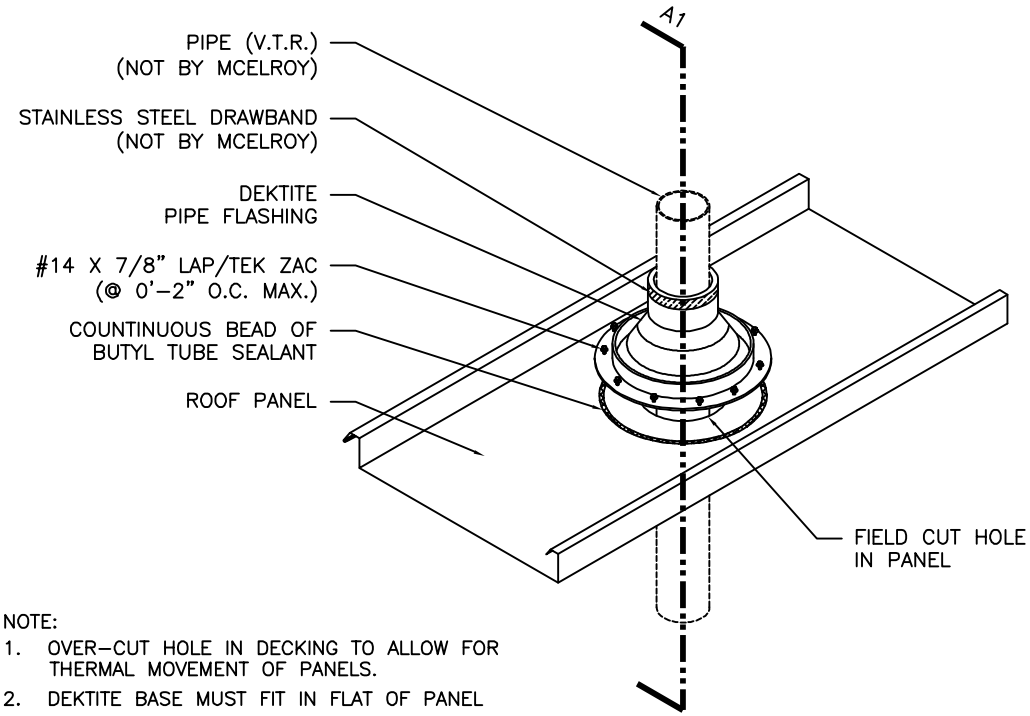

NOTE:

1. OVER-CUT HOLE IN DECKING TO ALLOW FOR THERMAL MOVEMENT OF PANELS.
2. DEKTITE BASE MUST FIT IN FLAT OF PANEL

McELROY METAL, INC.

DATE CREATED: 12/08/09