MAXIMA 2"

EAVE DRIP TRIM DETAIL

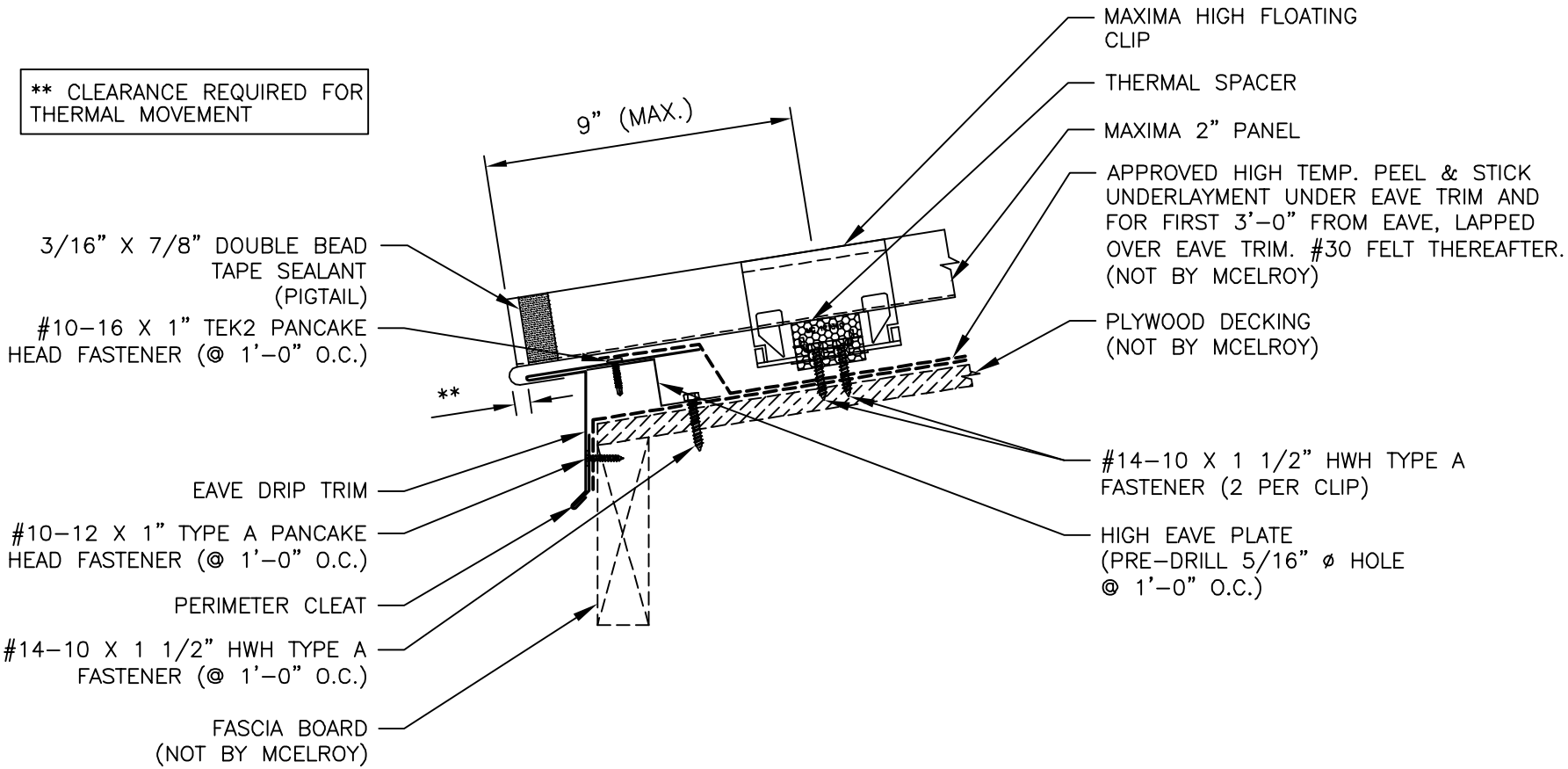

McELROY METAL, INC.

DATE CREATED: 03/10/08