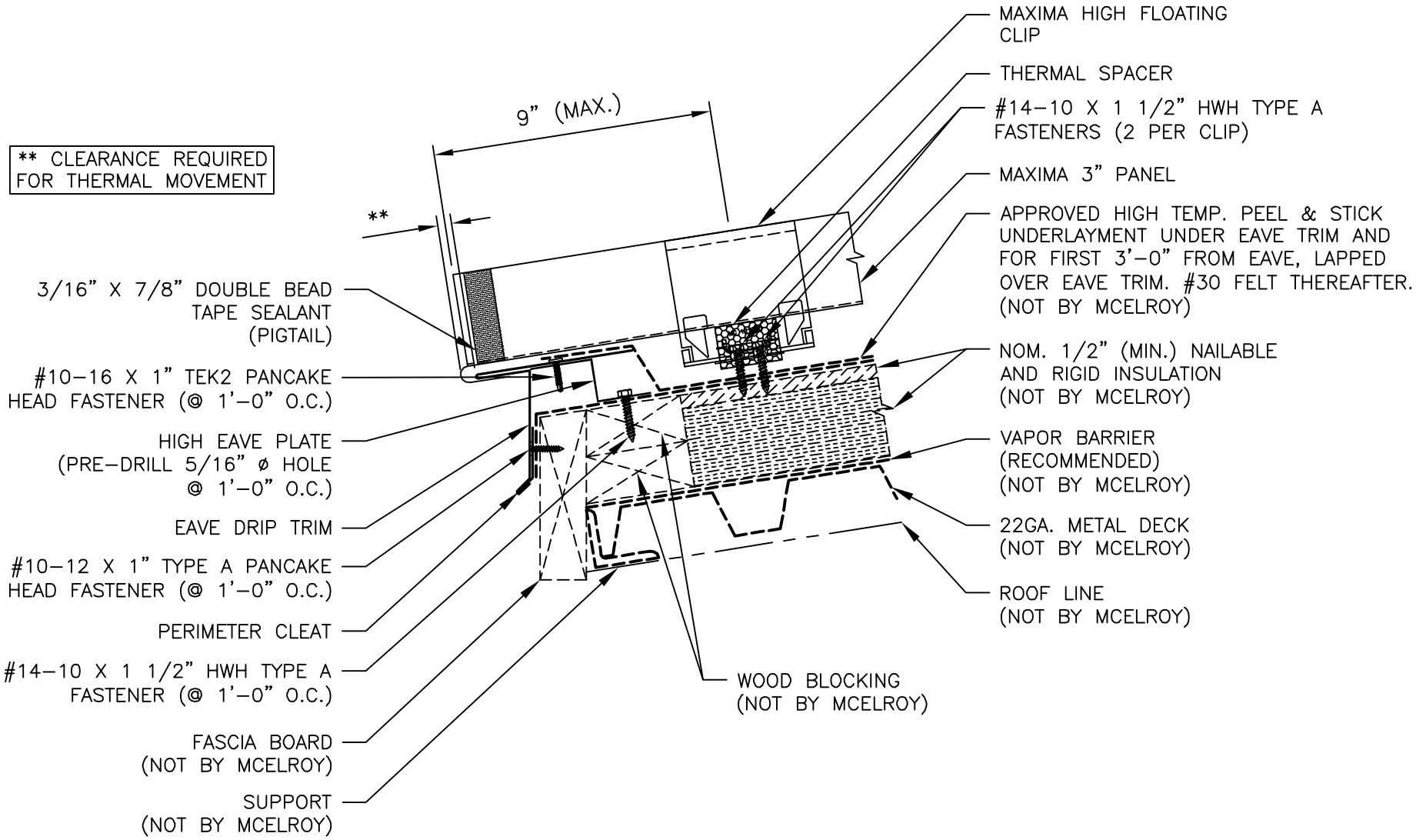EAVE DRIP TRIM DETAIL