MAXIMA 3"

EAVE DRIP TRIM DETAIL (ALT.)

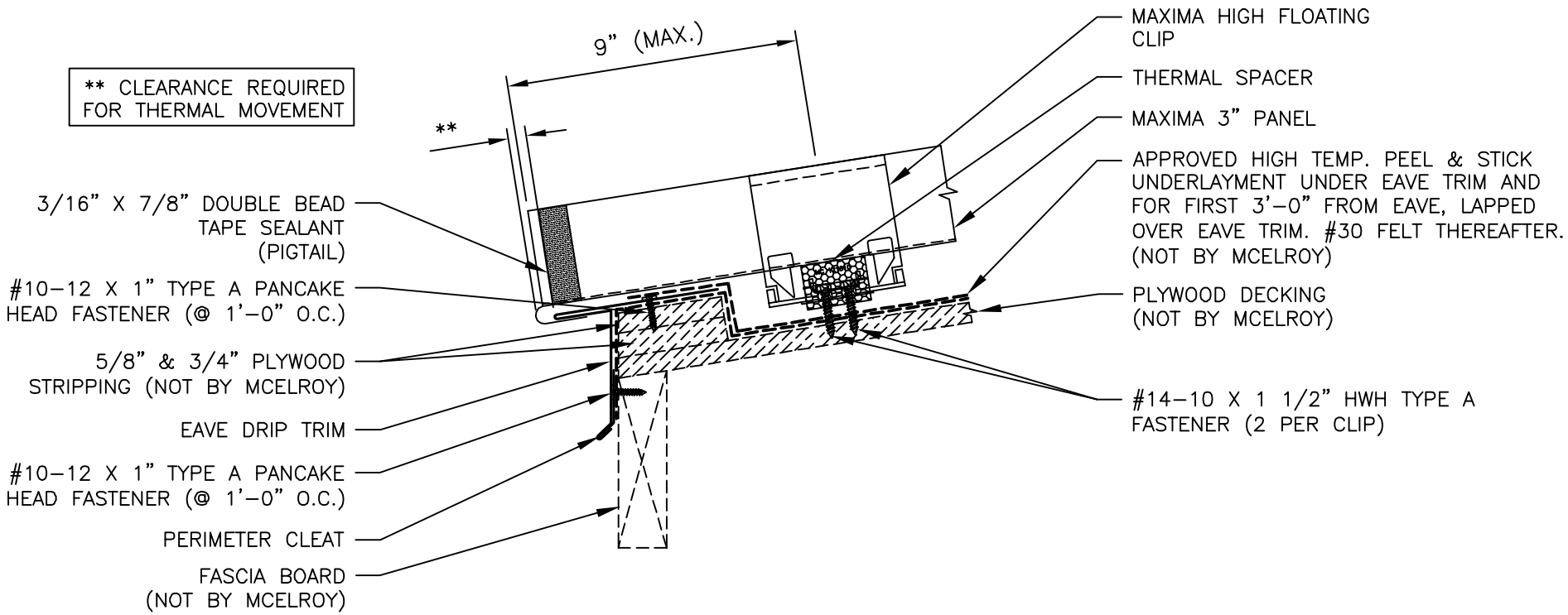

McELROY METAL, INC.

DATE CREATED: 03/14/08