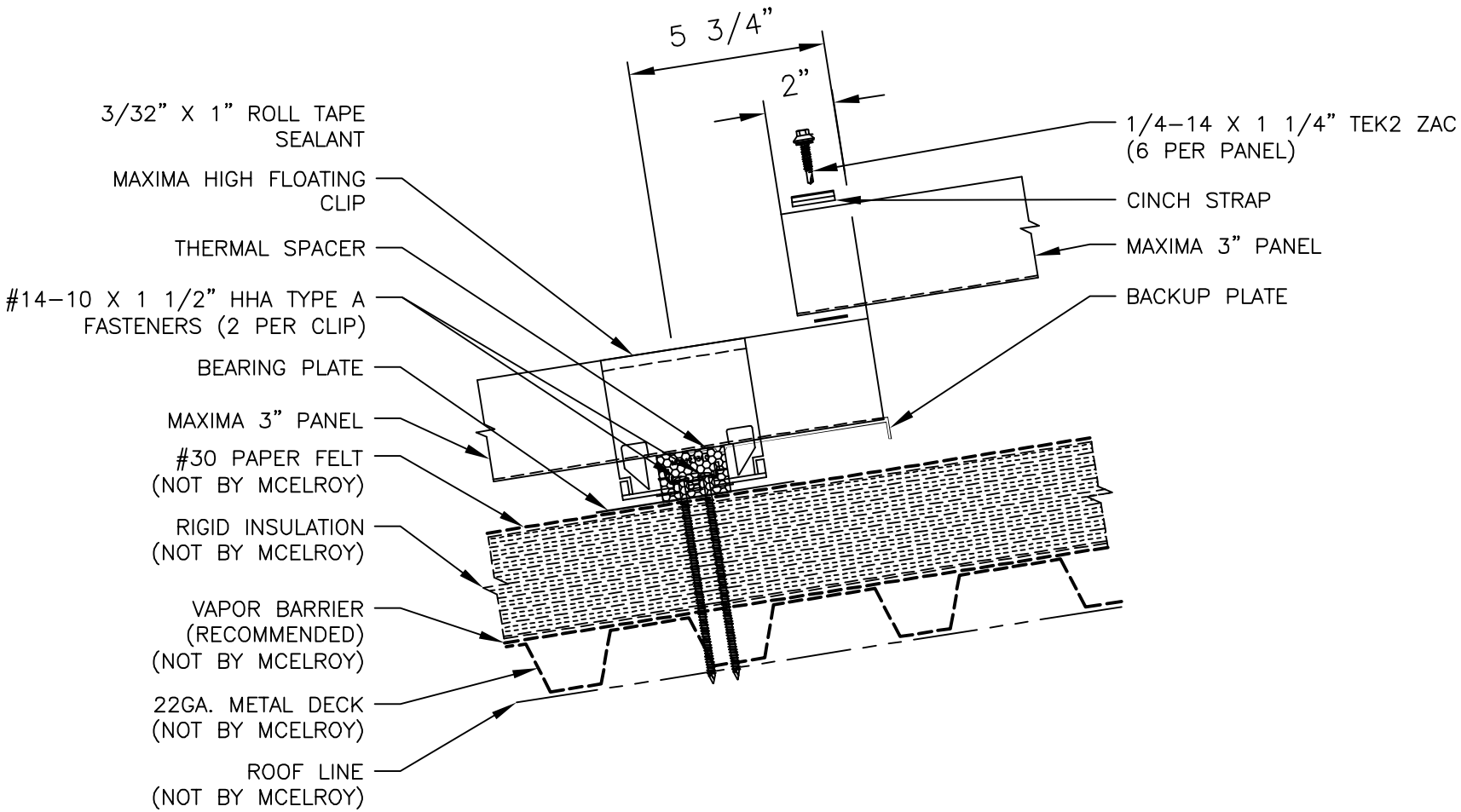END LAP DETAIL