HIP DETAIL

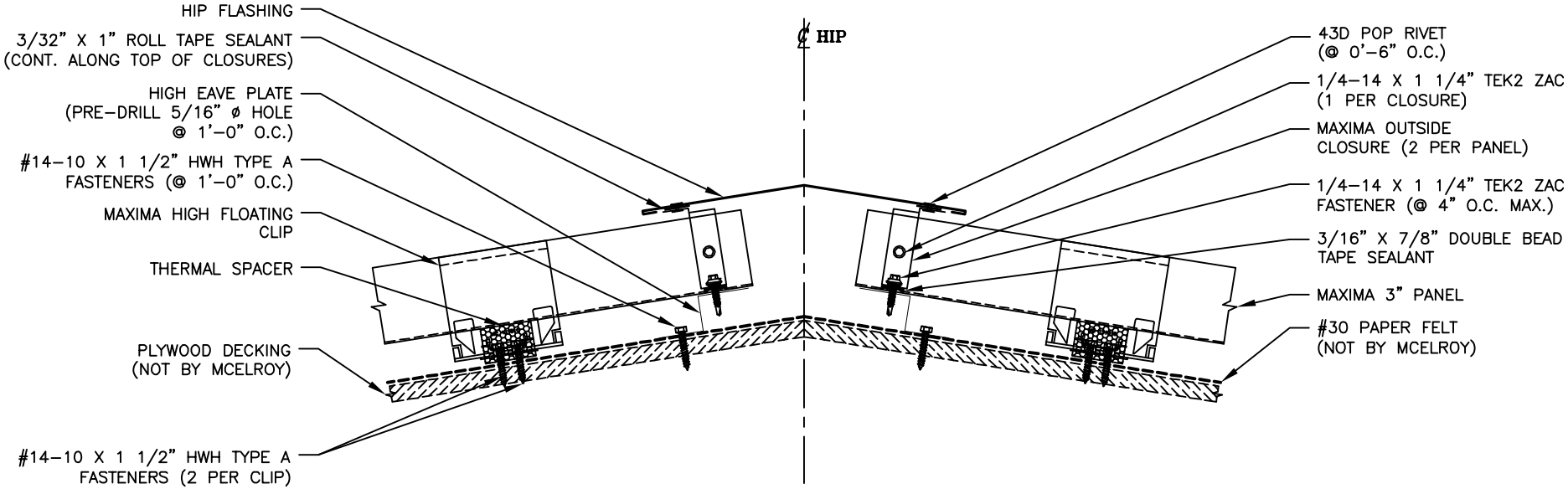
HIP FLASHING
3/32" X 1" ROLL TAPE SEALANT (CONT. ALONG TOP OF CLOSURES)
HIGH EAVE PLATE (PRE-DRILL 5/16" ø HOLE @ 1'-0" O.C.)
#14-10 X 1 1/2" HWH TYPE A FASTENERS (@ 1'-0" O.C.)
MAXIMA HIGH FLOATING CLIP
THERMAL SPACER
PLYWOOD DECKING (NOT BY MCELROY)
#14-10 X 1 1/2" HWH TYPE A FASTENERS (2 PER CLIP)
℄ HIP
43D POP RIVET (@ 0'-6" O.C.)
1/4-14 X 1 1/4" TEK2 ZAC (1 PER CLOSURE)
MAXIMA OUTSIDE CLOSURE (2 PER PANEL)
1/4-14 X 1 1/4" TEK2 ZAC FASTENER (@ 4" O.C. MAX.)
3/16" X 7/8" DOUBLE BEAD TAPE SEALANT
MAXIMA 3" PANEL
#30 PAPER FELT (NOT BY MCELROY)