MAXIMA 2"
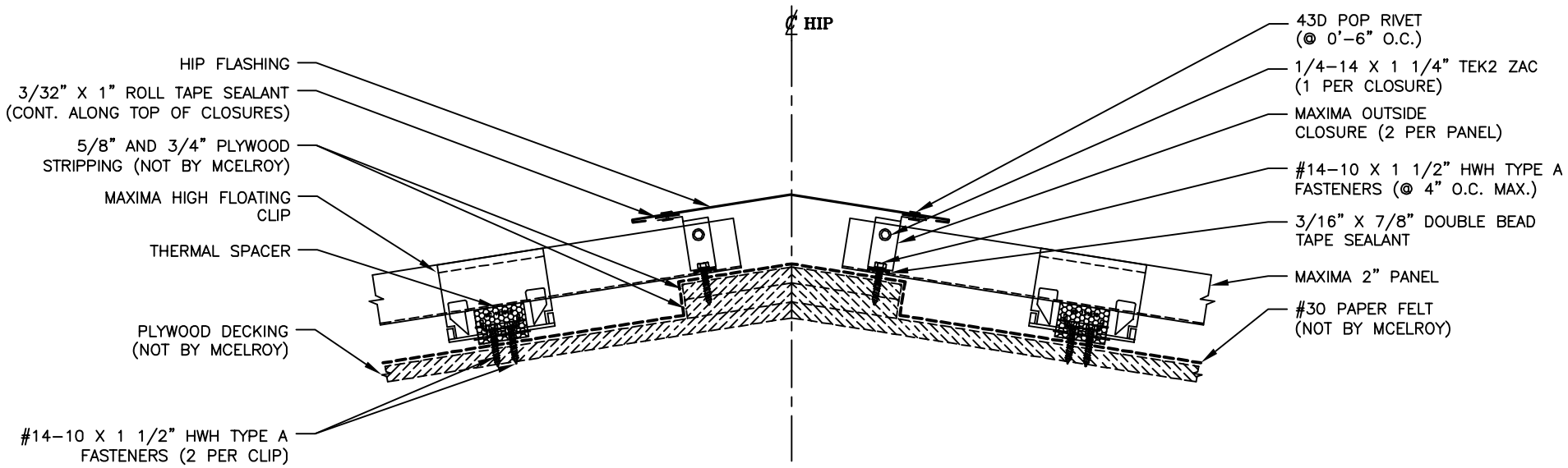
HIP DETAIL (ALT.)