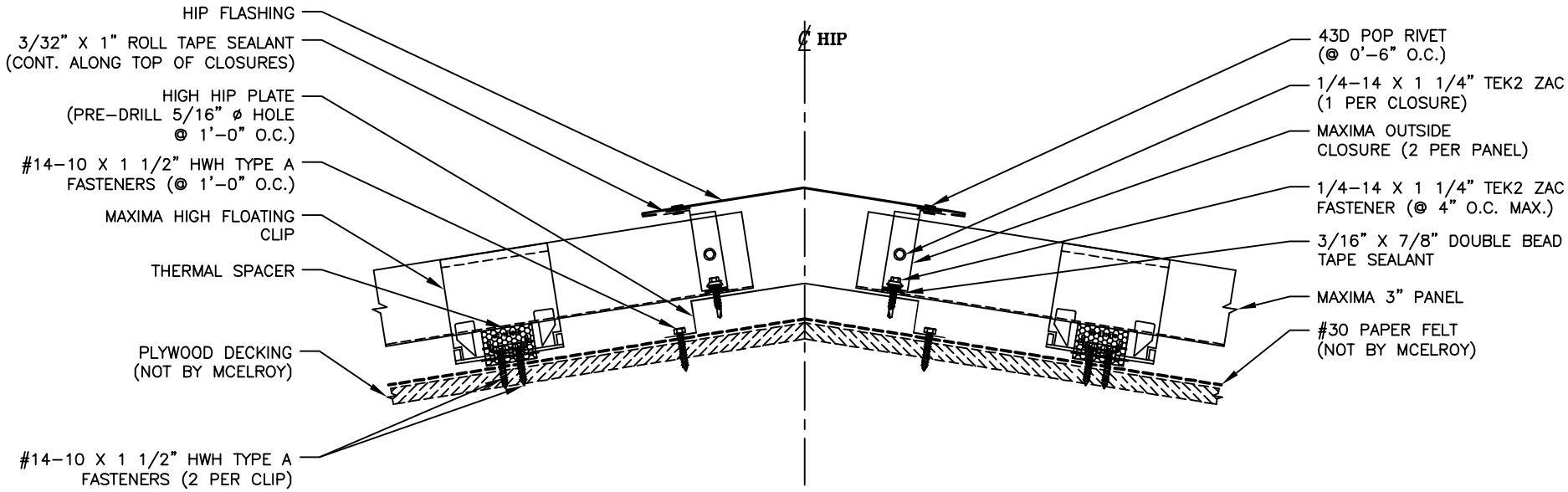# HIP DETAIL (PLATE)