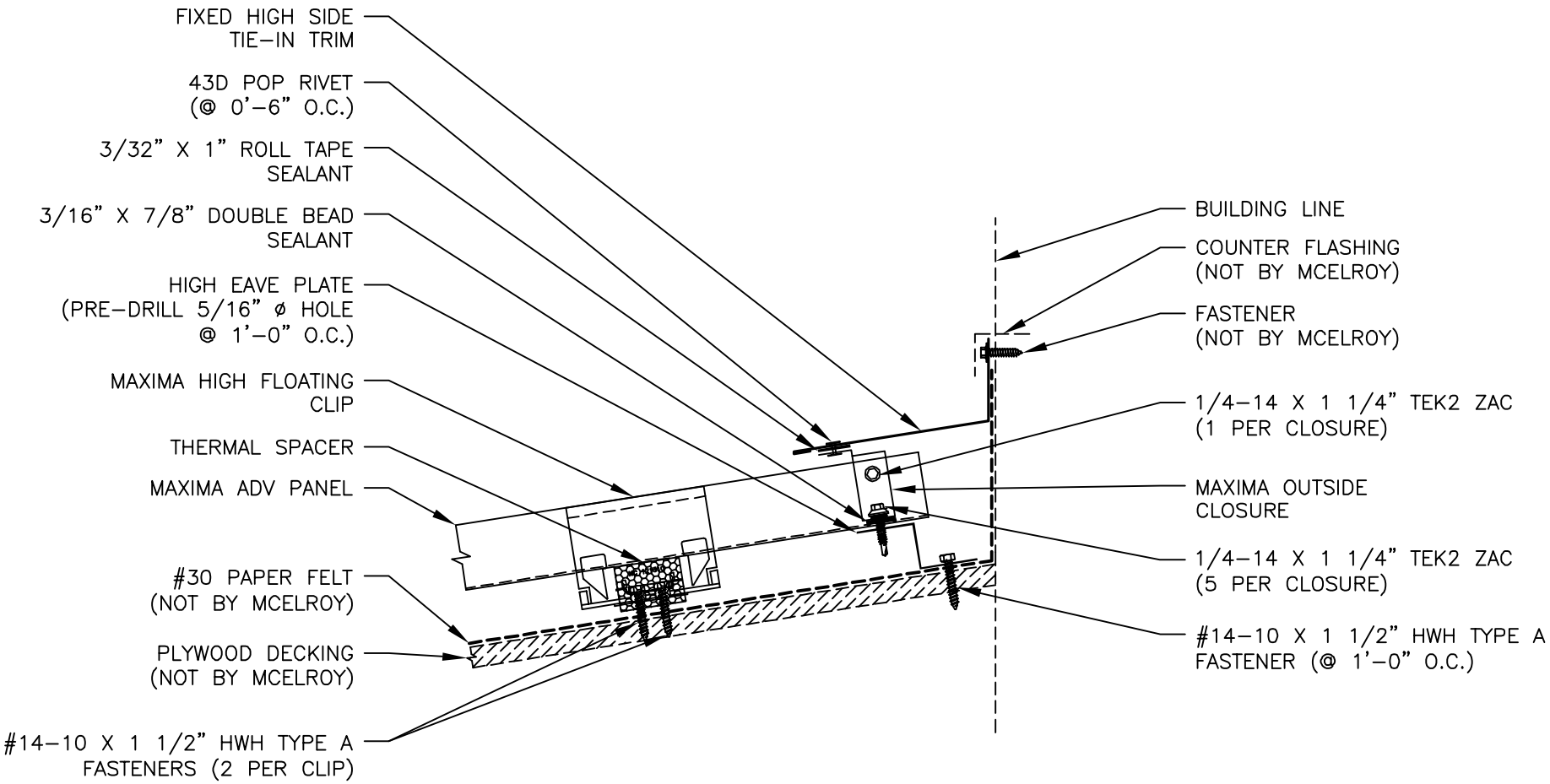HI-SIDE TIE-IN DETAIL