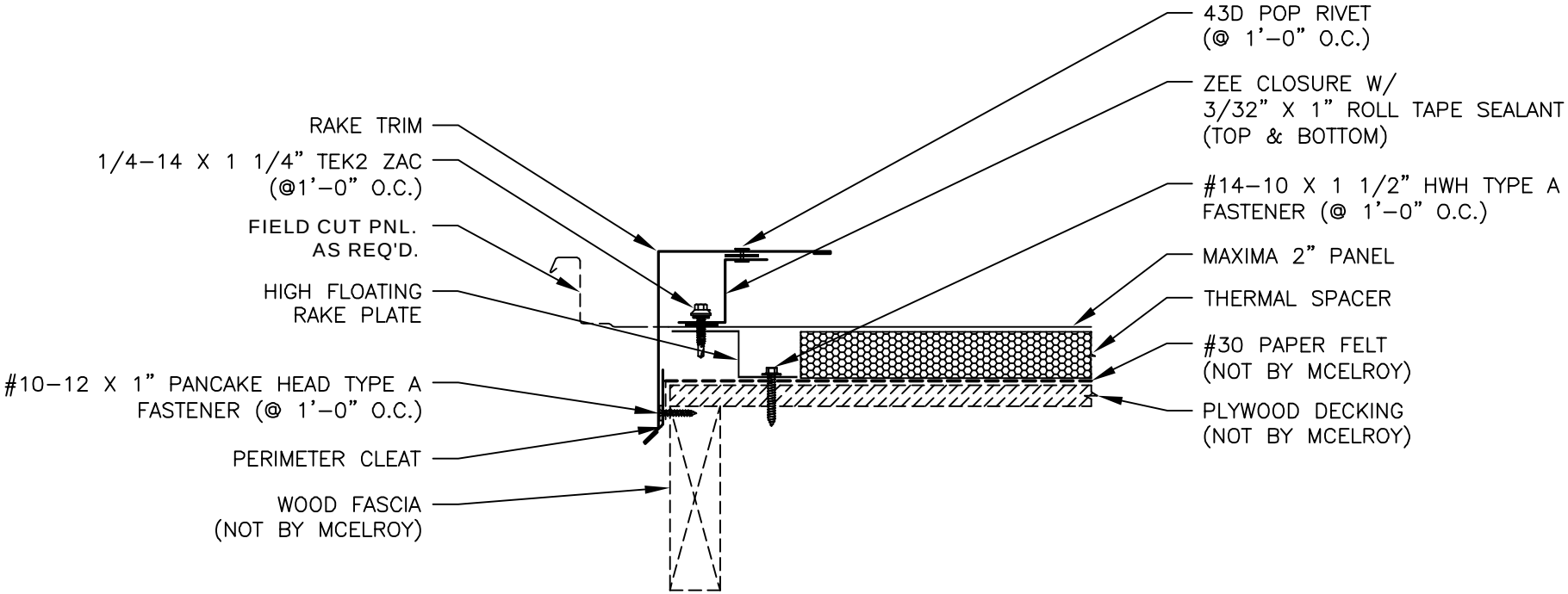RAKE DETAIL (OFF MODULE)