MAXIMA 3"

RAKE DETAIL (OFF MODULE)

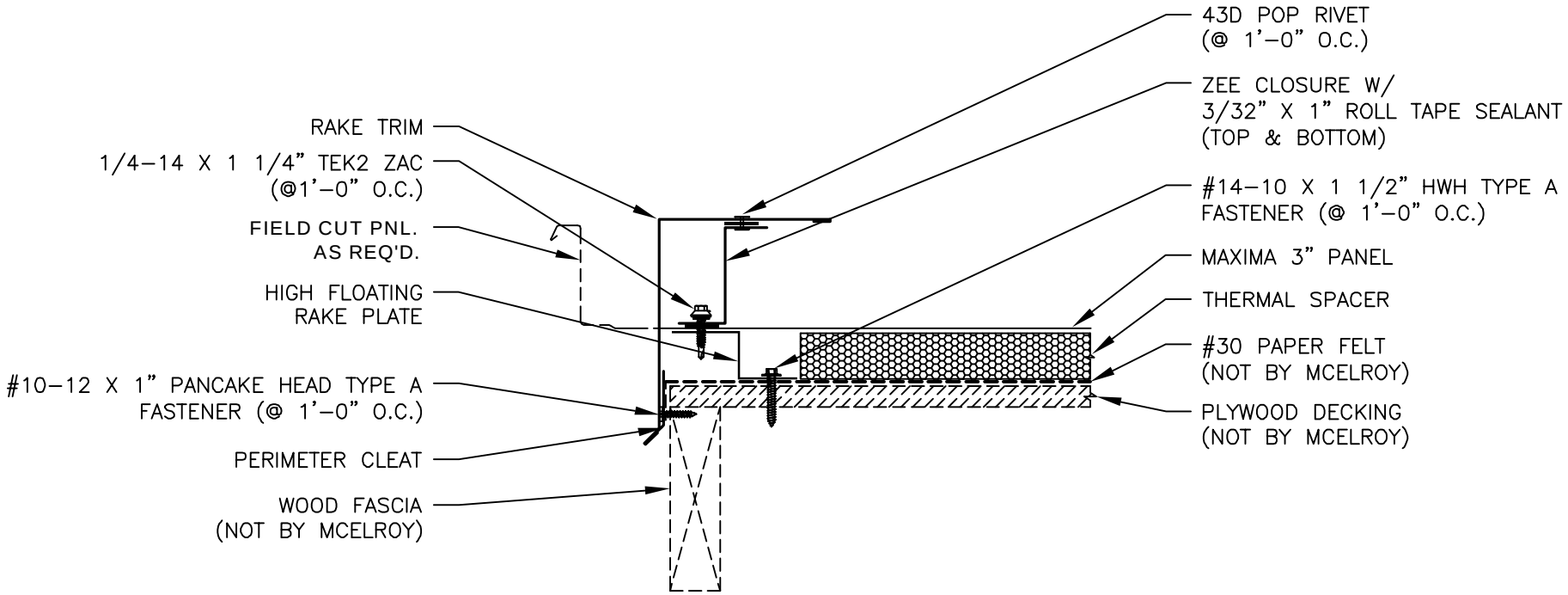

McELROY METAL, INC.

DATE CREATED: 03/14/08