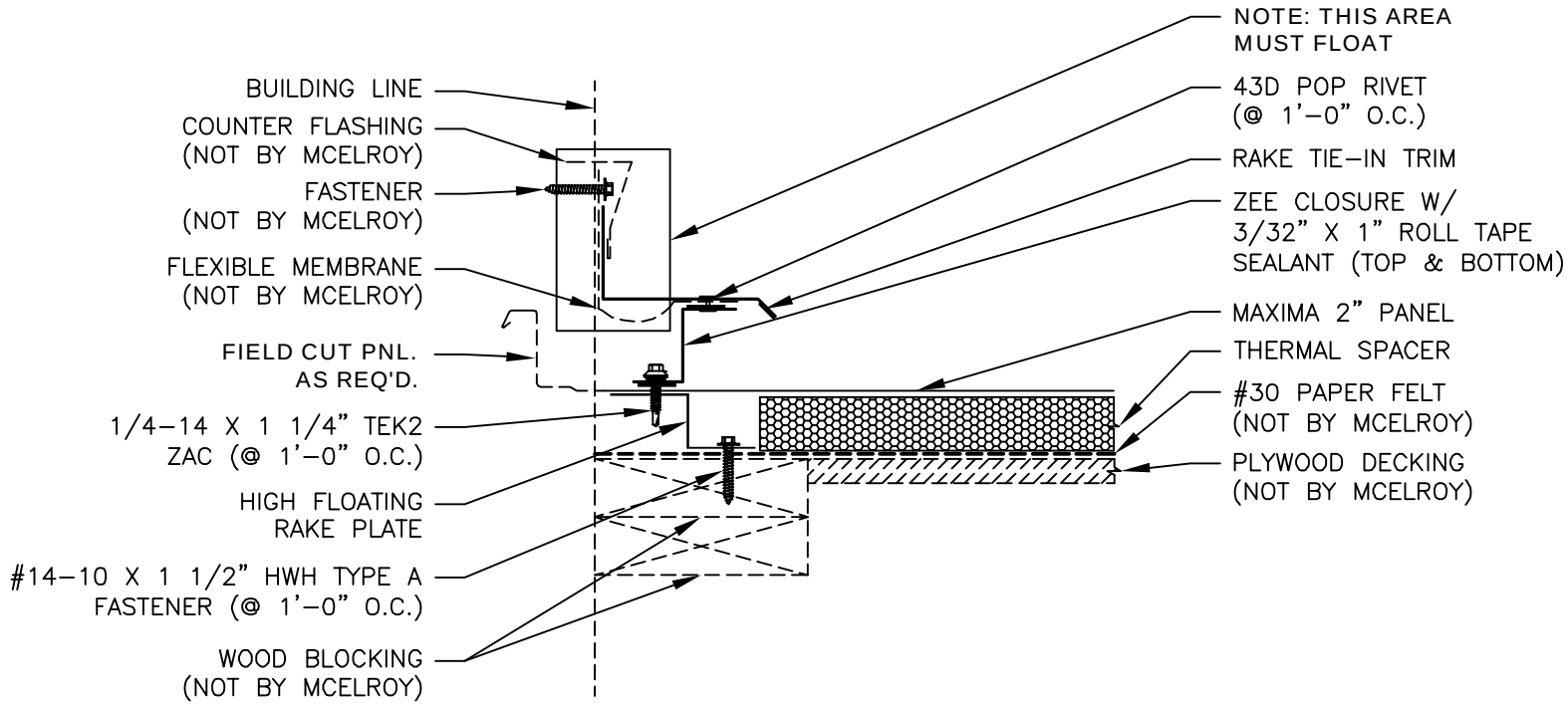RAKE TIE-IN DETAIL (OFF MODULE)