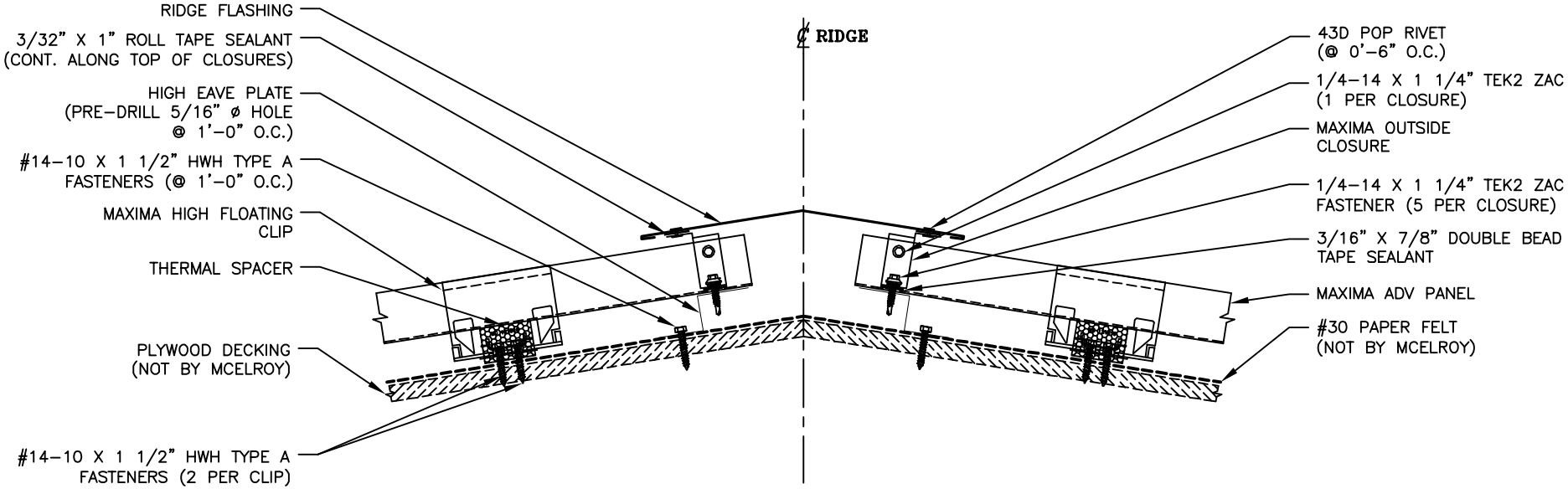RIDGE DETAIL