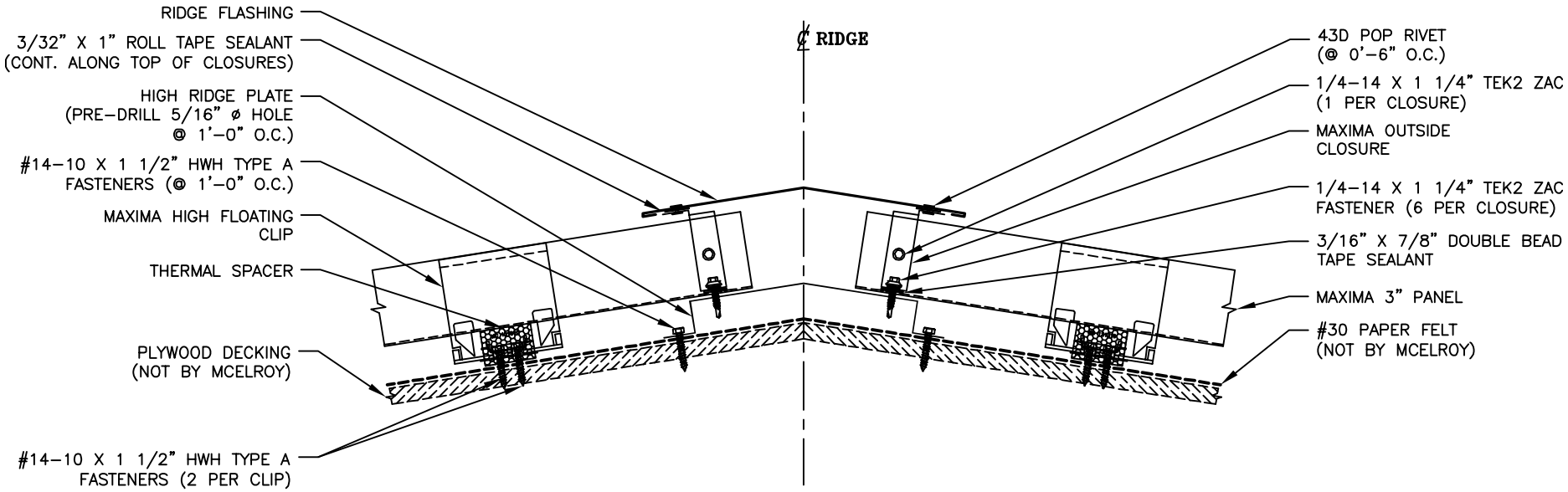# RIDGE DETAIL (PLATE)