MAXIMA 2"

EAVE DRIP TRIM DETAIL (ALT.)

** CLEARANCE REQUIRED FOR THERMAL MOVEMENT

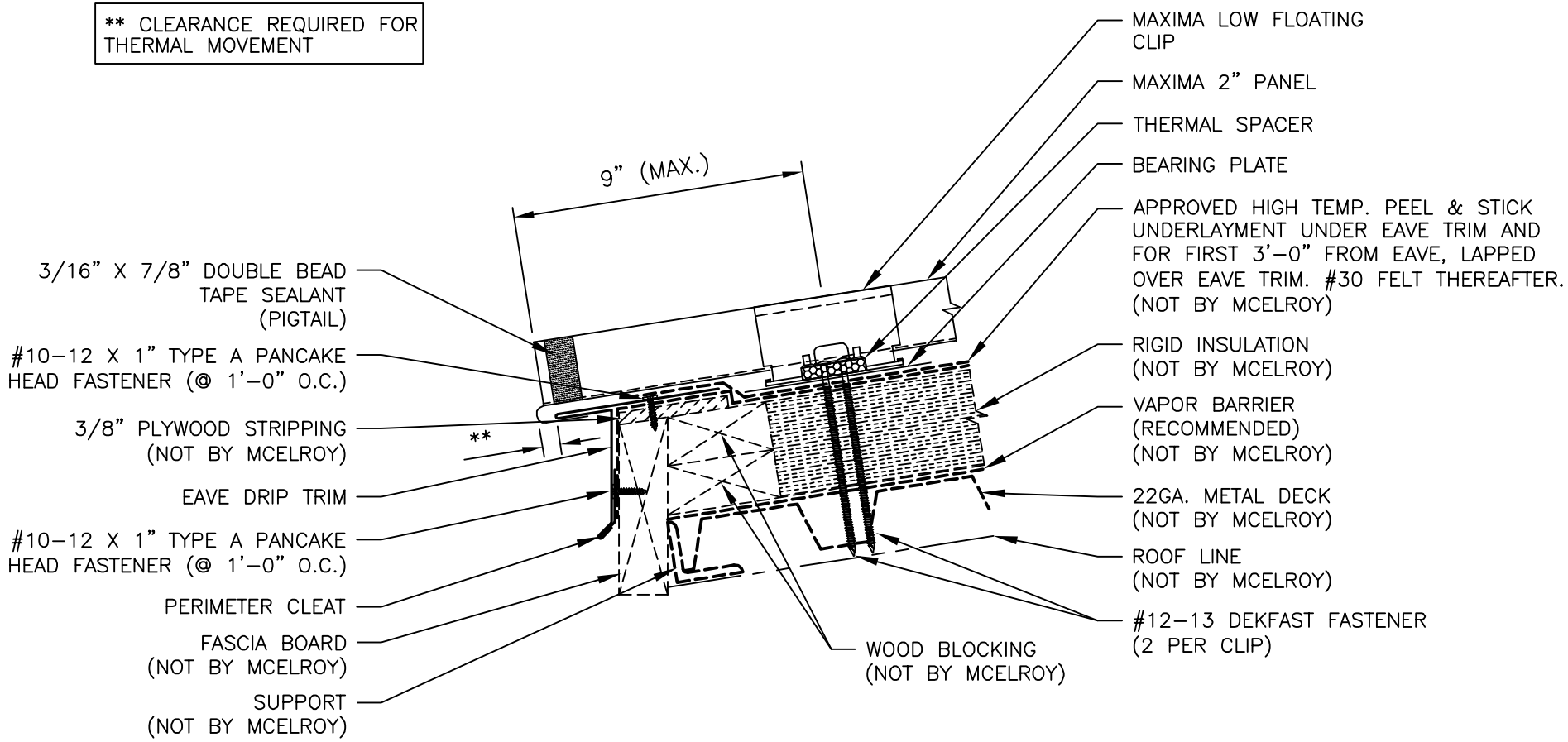

McELROY METAL, INC.

DATE CREATED: 03/07/08