EAVE DRIP TRIM DETAIL (ALT.)
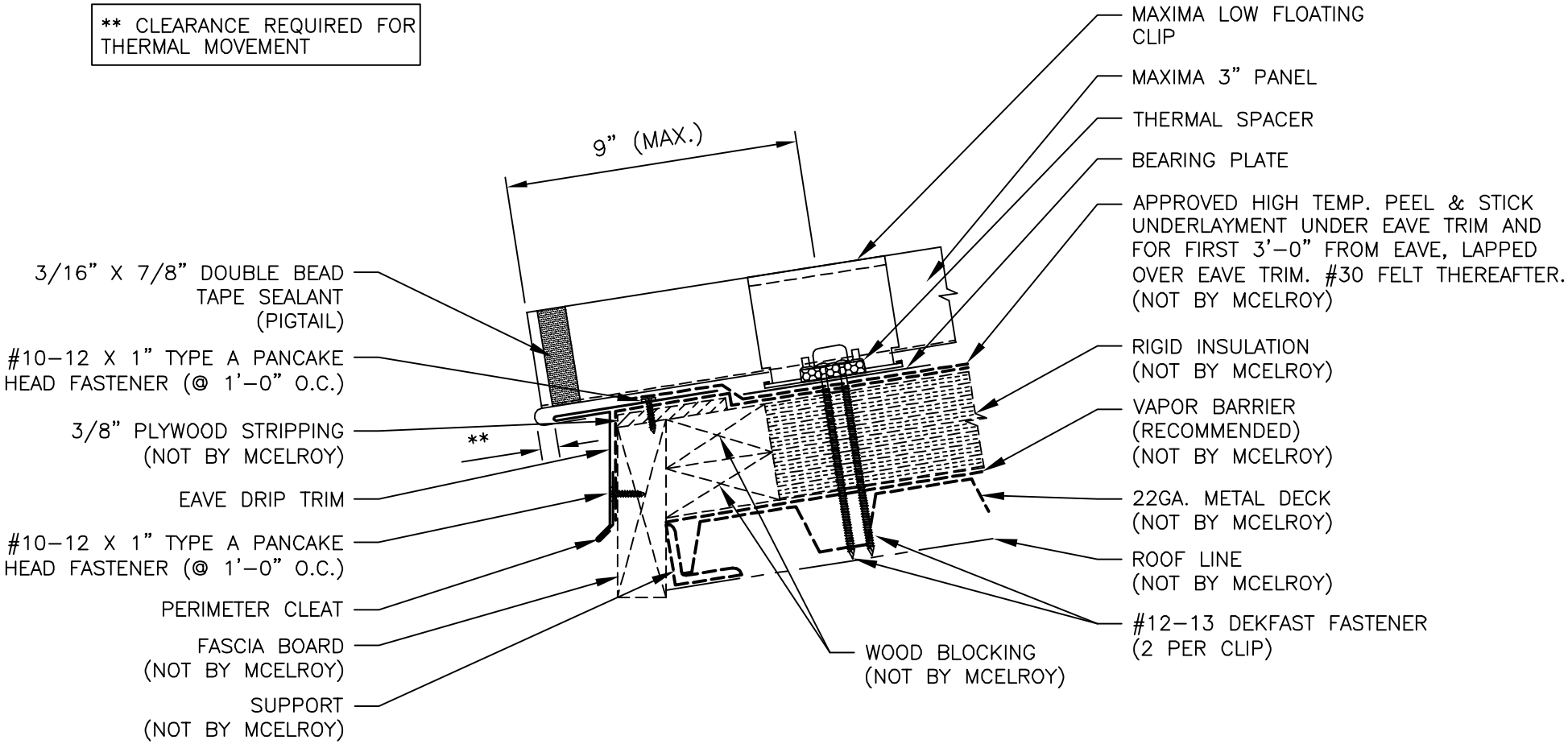
** CLEARANCE REQUIRED FOR THERMAL MOVEMENT