MAXIMA 1.5

EAVE w/o GUTTER DETAIL

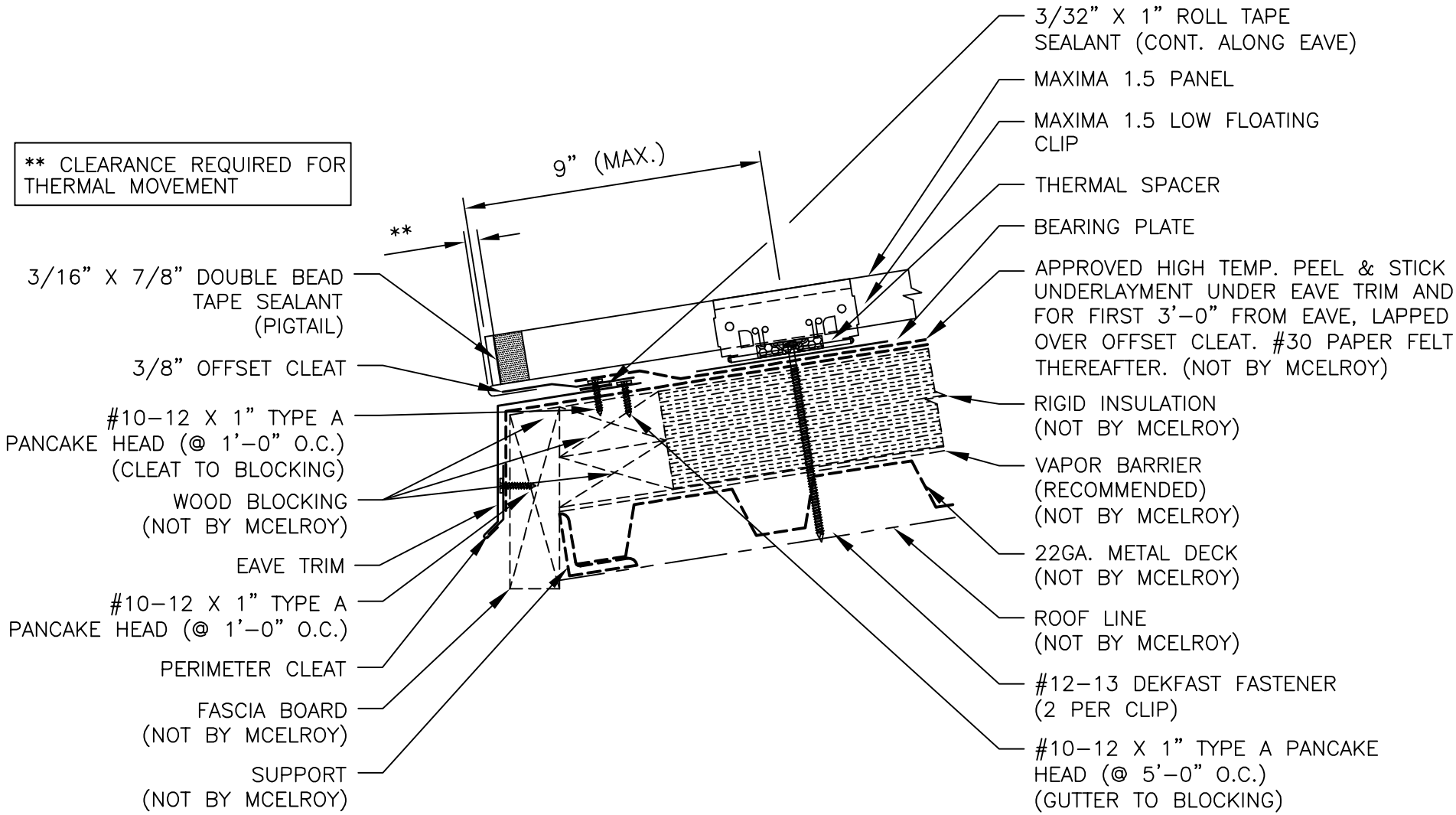

McELROY METAL, INC.

DATE CREATED: 05/09/08