MAXIMA ADV

EAVE w/o GUTTER DETAIL

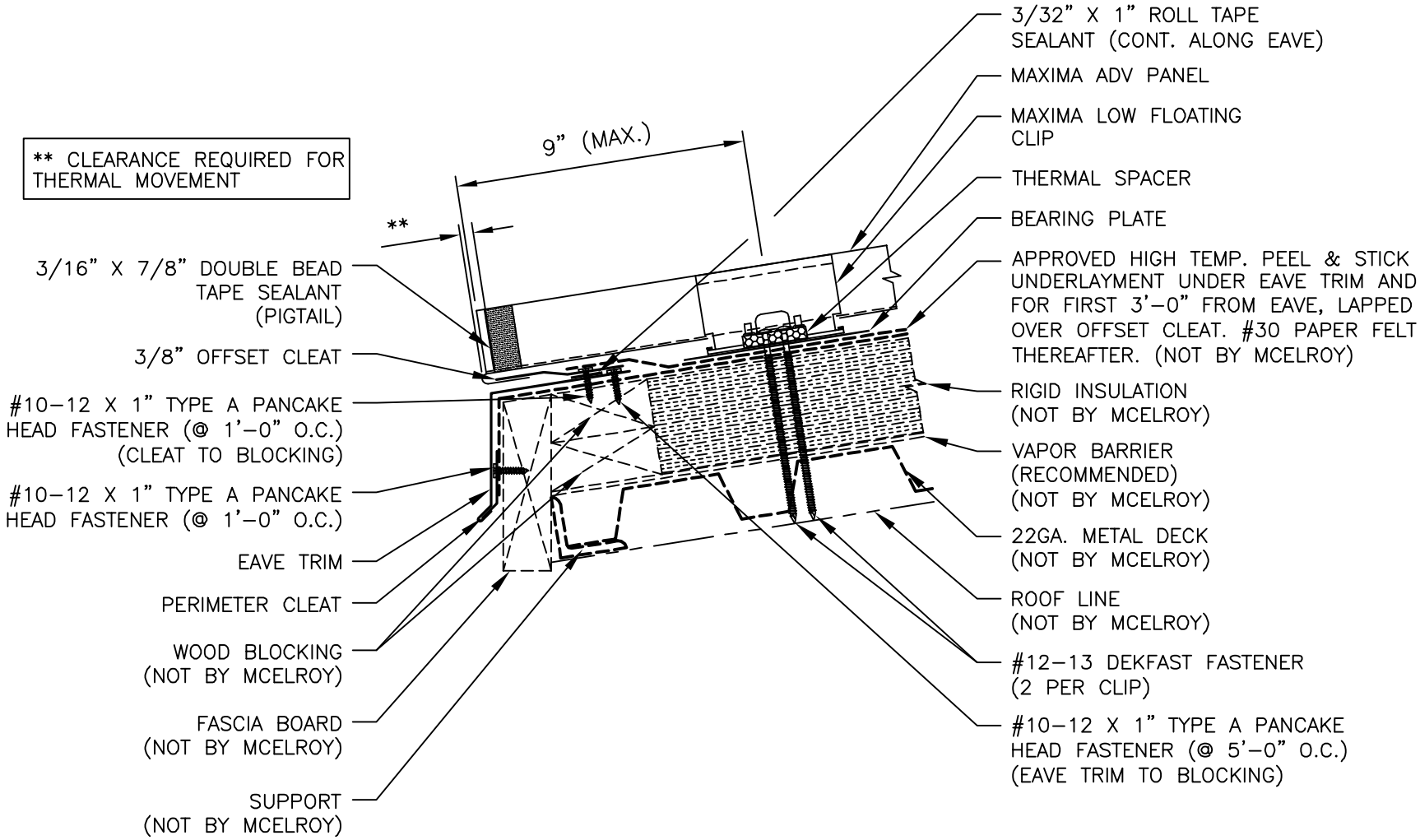

McELROY METAL, INC.

DATE CREATED: 03/05/08