MAXIMA 1.5

END LAP DETAIL

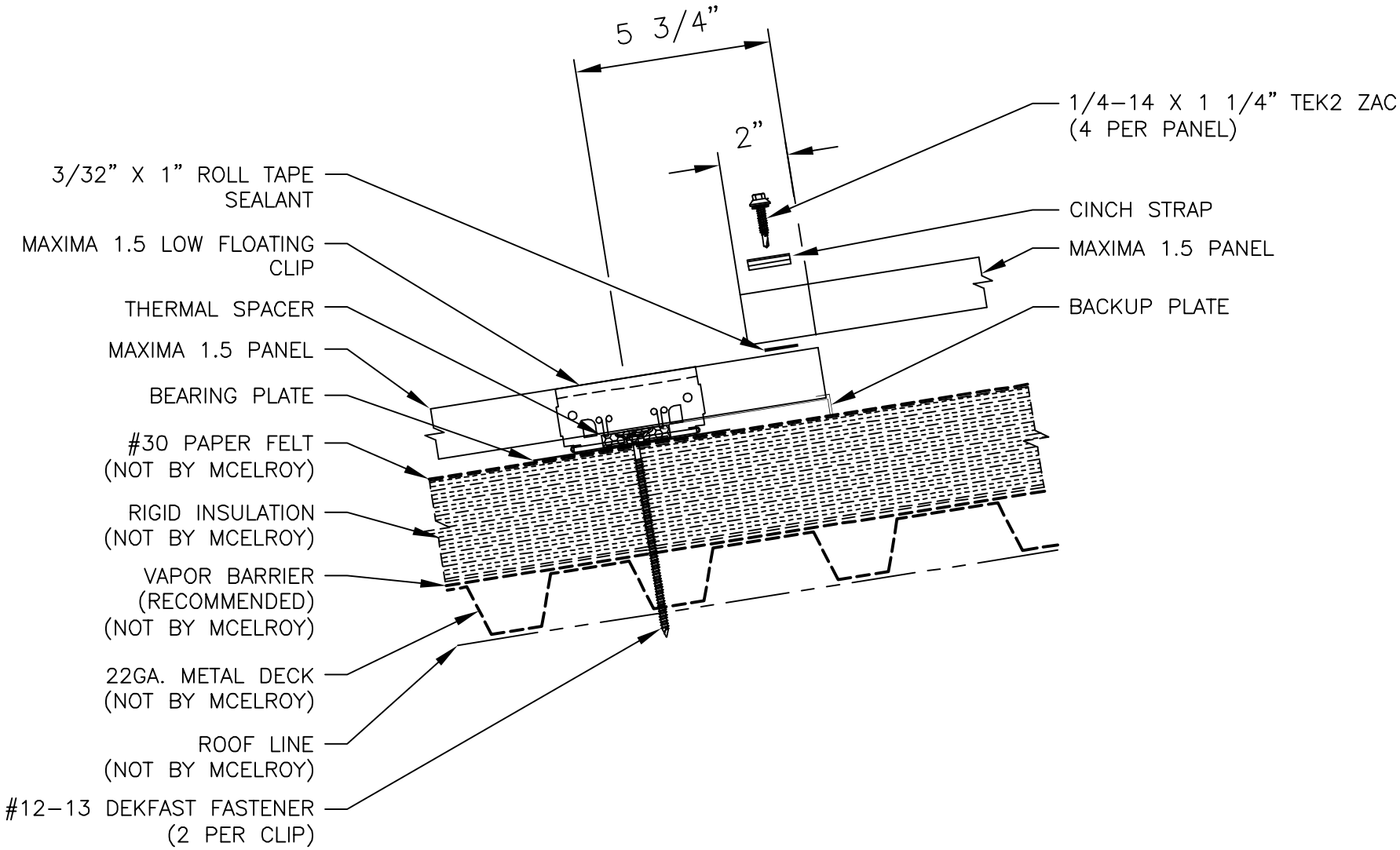

McELROY METAL, INC.

DATE CREATED: 01/03/08