HIP DETAIL

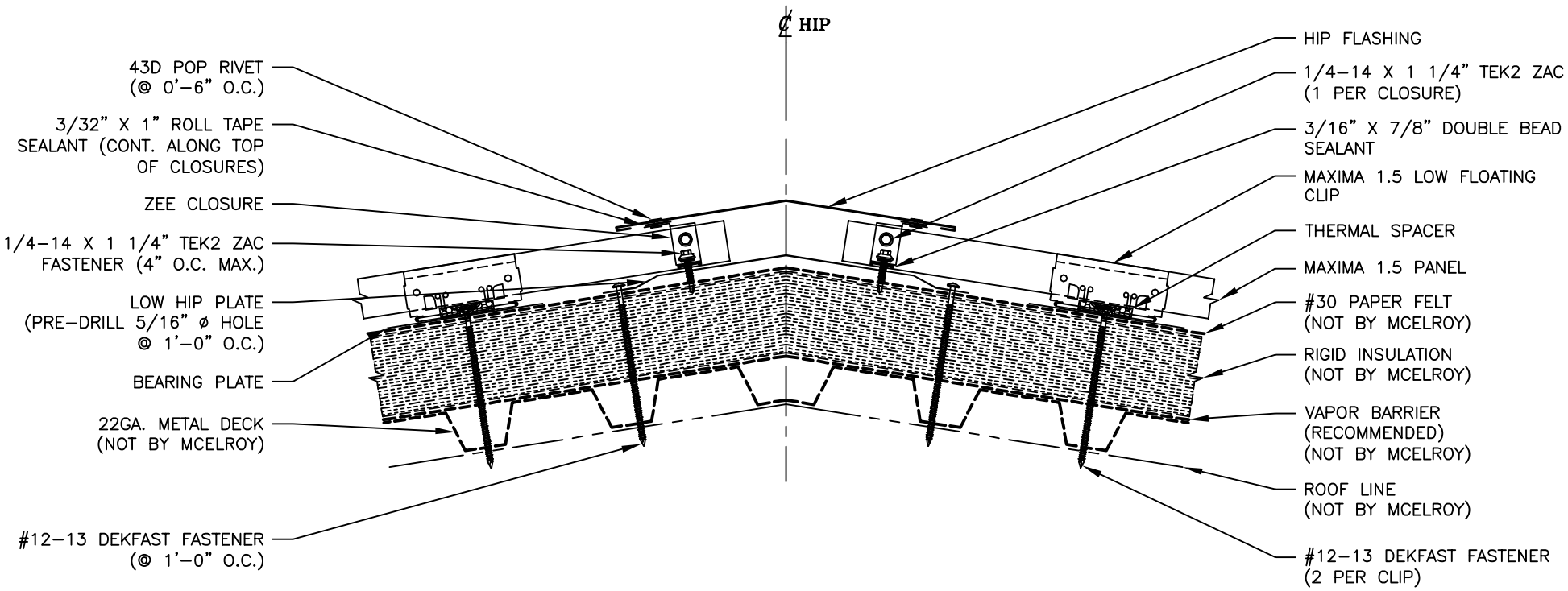
℄ HIP
43D POP RIVET (@ 0'–6" O.C.)
3/32" X 1" ROLL TAPE SEALANT (CONT. ALONG TOP OF CLOSURES)
ZEE CLOSURE
1/4–14 X 1 1/4" TEK2 ZAC FASTENER (4" O.C. MAX.)
LOW HIP PLATE (PRE–DRILL 5/16" ø HOLE @ 1'–0" O.C.)
BEARING PLATE
22GA. METAL DECK (NOT BY MCELROY)
#12–13 DEKFAST FASTENER (@ 1'–0" O.C.)
HIP FLASHING
1/4–14 X 1 1/4" TEK2 ZAC (1 PER CLOSURE)
3/16" X 7/8" DOUBLE BEAD SEALANT
MAXIMA 1.5 LOW FLOATING CLIP
THERMAL SPACER
MAXIMA 1.5 PANEL
#30 PAPER FELT (NOT BY MCELROY)
RIGID INSULATION (NOT BY MCELROY)
VAPOR BARRIER (RECOMMENDED) (NOT BY MCELROY)
ROOF LINE (NOT BY MCELROY)
#12–13 DEKFAST FASTENER (2 PER CLIP)