HIP DETAIL

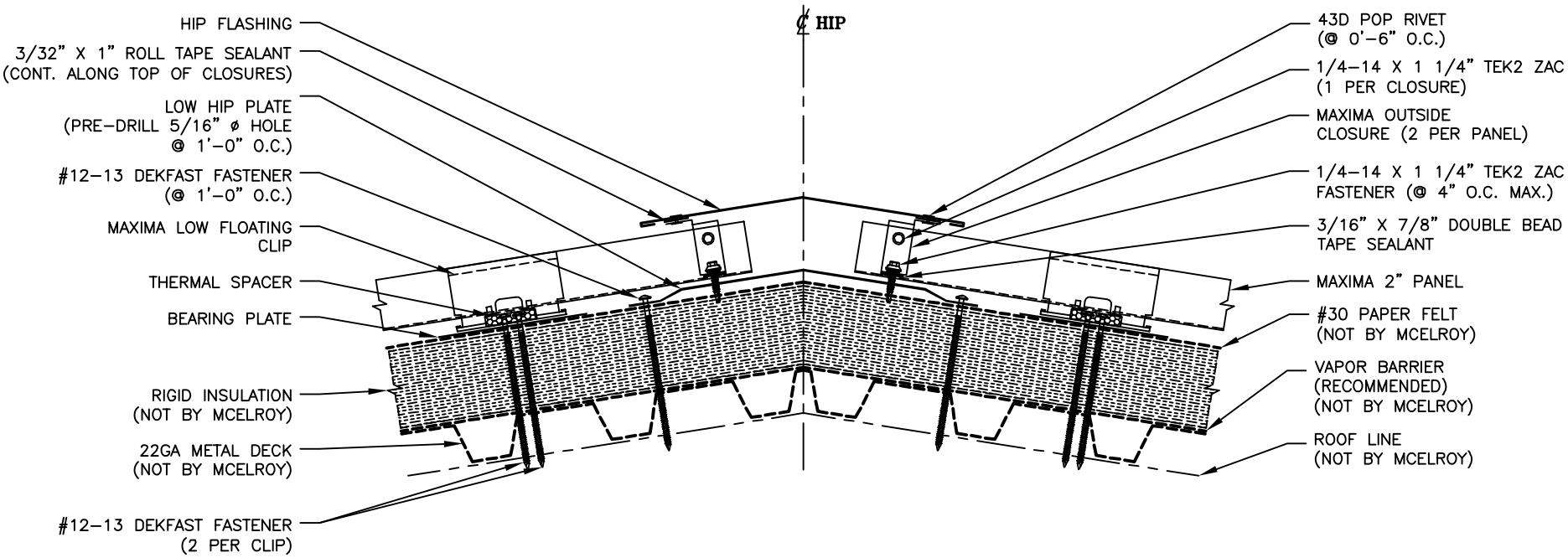
℄ HIP
HIP FLASHING
3/32" X 1" ROLL TAPE SEALANT (CONT. ALONG TOP OF CLOSURES)
LOW HIP PLATE (PRE-DRILL 5/16" ø HOLE @ 1'-0" O.C.)
#12-13 DEKFAST FASTENER (@ 1'-0" O.C.)
MAXIMA LOW FLOATING CLIP
THERMAL SPACER
BEARING PLATE
RIGID INSULATION (NOT BY MCELROY)
22GA METAL DECK (NOT BY MCELROY)
#12-13 DEKFAST FASTENER (2 PER CLIP)
43D POP RIVET (@ 0'-6" O.C.)
1/4-14 X 1 1/4" TEK2 ZAC (1 PER CLOSURE)
MAXIMA OUTSIDE CLOSURE (2 PER PANEL)
1/4-14 X 1 1/4" TEK2 ZAC FASTENER (@ 4" O.C. MAX.)
3/16" X 7/8" DOUBLE BEAD TAPE SEALANT
MAXIMA 2" PANEL
#30 PAPER FELT (NOT BY MCELROY)
VAPOR BARRIER (RECOMMENDED) (NOT BY MCELROY)
ROOF LINE (NOT BY MCELROY)