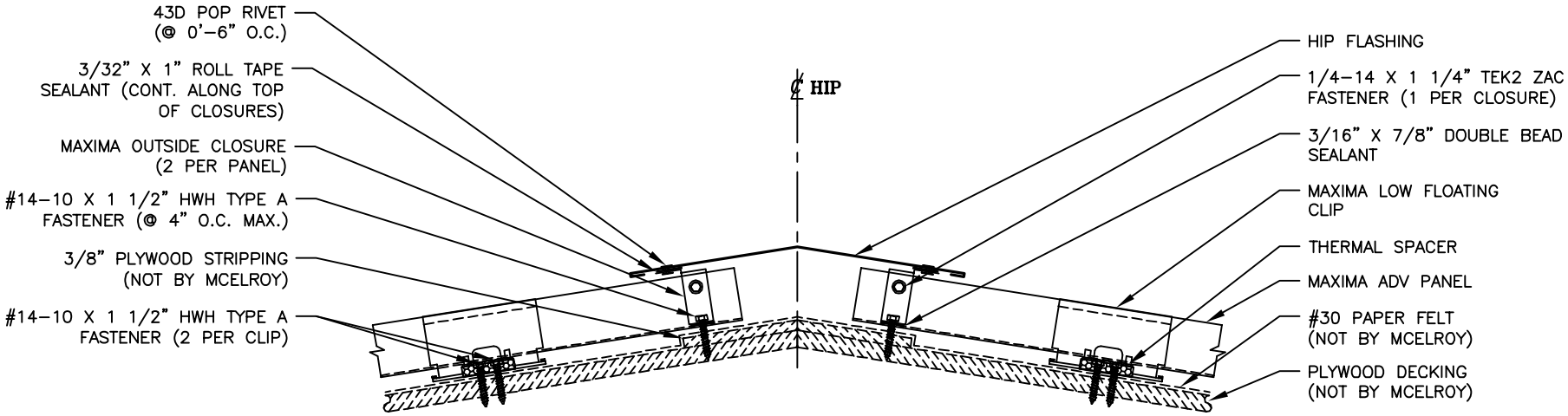HIP DETAIL (ALT.)