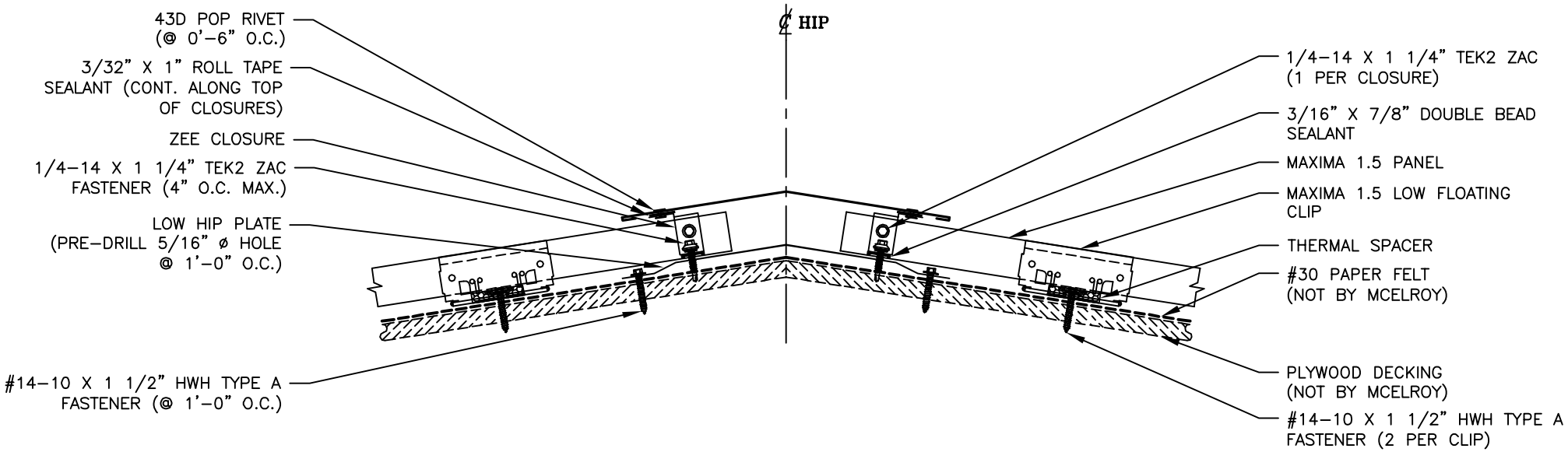HIP DETAIL (HIP PLATE)