RAKE DETAIL

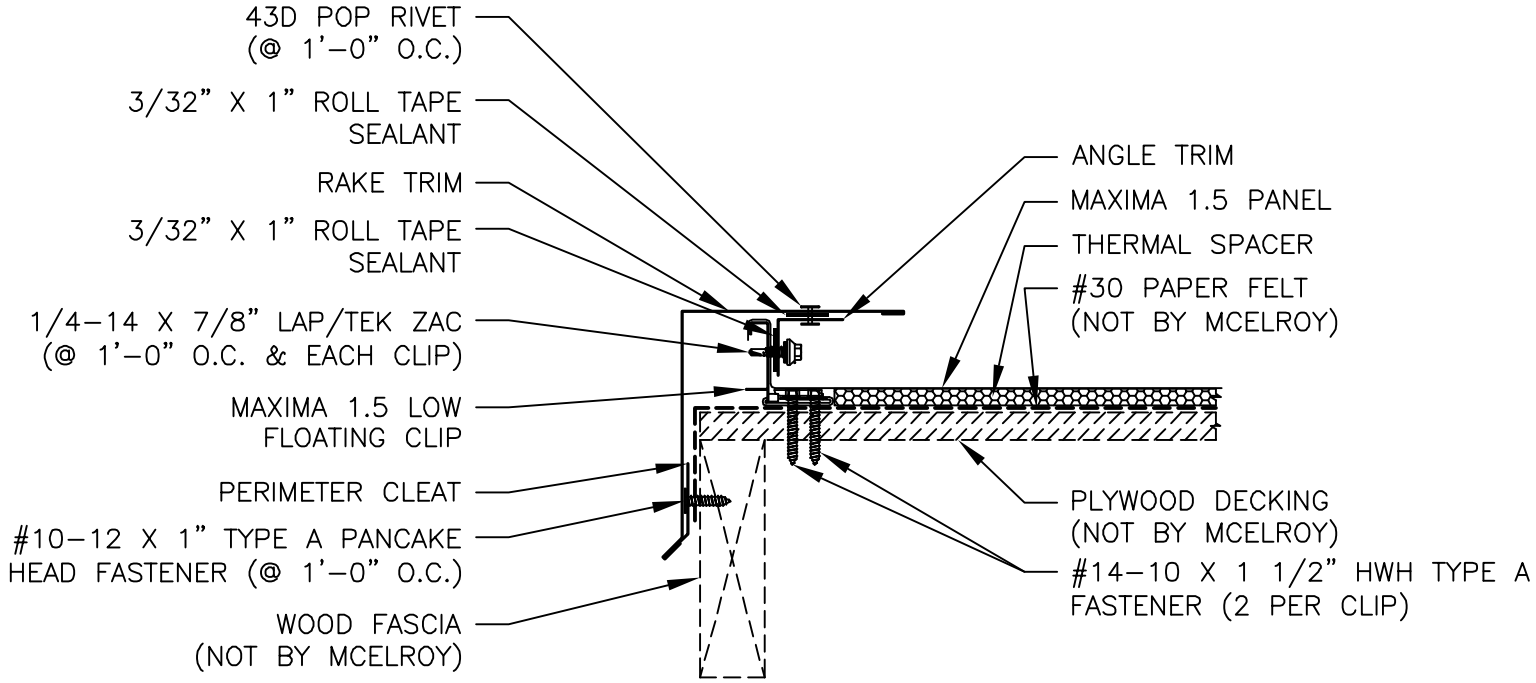
43D POP RIVET
(@ 1'-0" O.C.)
3/32" X 1" ROLL TAPE
SEALANT
RAKE TRIM
3/32" X 1" ROLL TAPE
SEALANT
1/4-14 X 7/8" LAP/TEK ZAC
(@ 1'-0" O.C. & EACH CLIP)
MAXIMA 1.5 LOW
FLOATING CLIP
PERIMETER CLEAT
#10-12 X 1" TYPE A PANCAKE
HEAD FASTENER (@ 1'-0" O.C.)
WOOD FASCIA
(NOT BY MCELROY)
ANGLE TRIM
MAXIMA 1.5 PANEL
THERMAL SPACER
#30 PAPER FELT
(NOT BY MCELROY)
PLYWOOD DECKING
(NOT BY MCELROY)
#14-10 X 1 1/2" HWH TYPE A
FASTENER (2 PER CLIP)