RAKE DETAIL

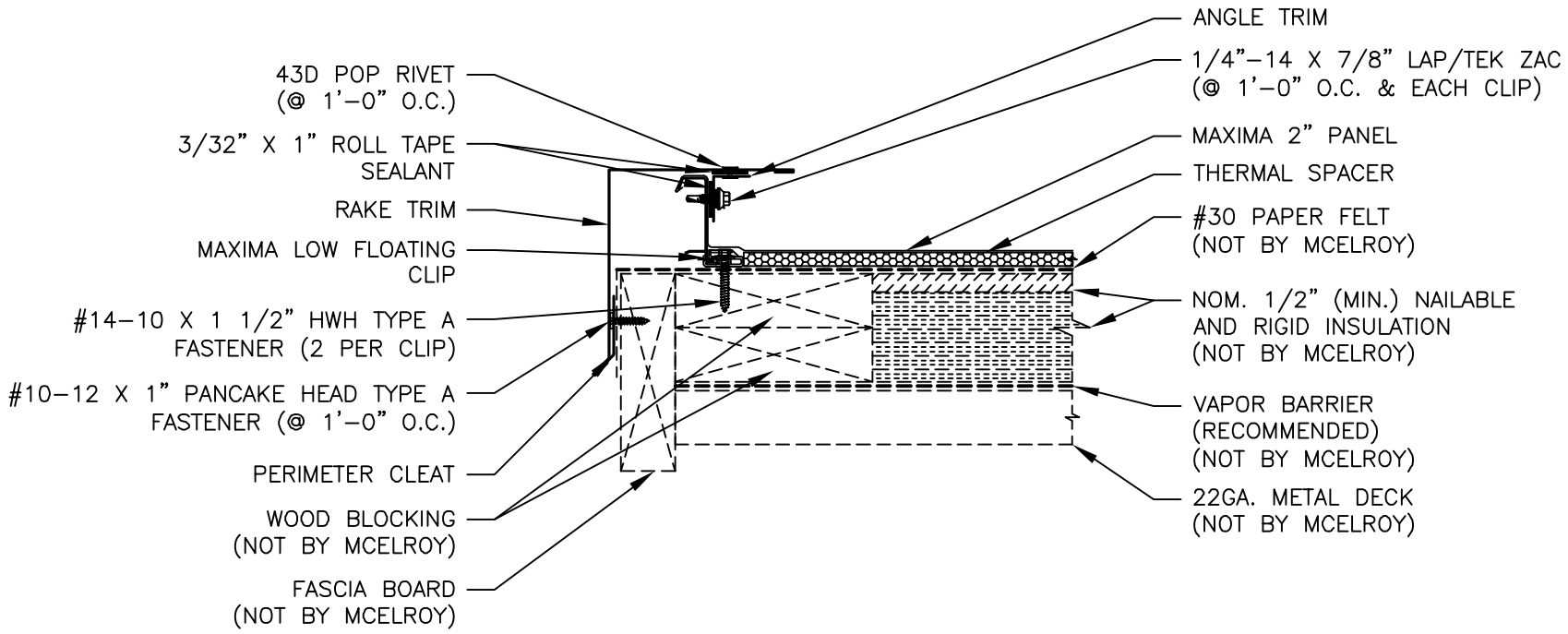
43D POP RIVET
(@ 1'–0" O.C.)
3/32" X 1" ROLL TAPE
SEALANT
RAKE TRIM
MAXIMA LOW FLOATING
CLIP
#14–10 X 1 1/2" HWH TYPE A
FASTENER (2 PER CLIP)
#10–12 X 1" PANCAKE HEAD TYPE A
FASTENER (@ 1'–0" O.C.)
PERIMETER CLEAT
WOOD BLOCKING
(NOT BY MCELROY)
FASCIA BOARD
(NOT BY MCELROY)
ANGLE TRIM
1/4"–14 X 7/8" LAP/TEK ZAC
(@ 1'–0" O.C. & EACH CLIP)
MAXIMA 2" PANEL
THERMAL SPACER
#30 PAPER FELT
(NOT BY MCELROY)
NOM. 1/2" (MIN.) NAILABLE
AND RIGID INSULATION
(NOT BY MCELROY)
VAPOR BARRIER
(RECOMMENDED)
(NOT BY MCELROY)
22GA. METAL DECK
(NOT BY MCELROY)