MAXIMA 2"
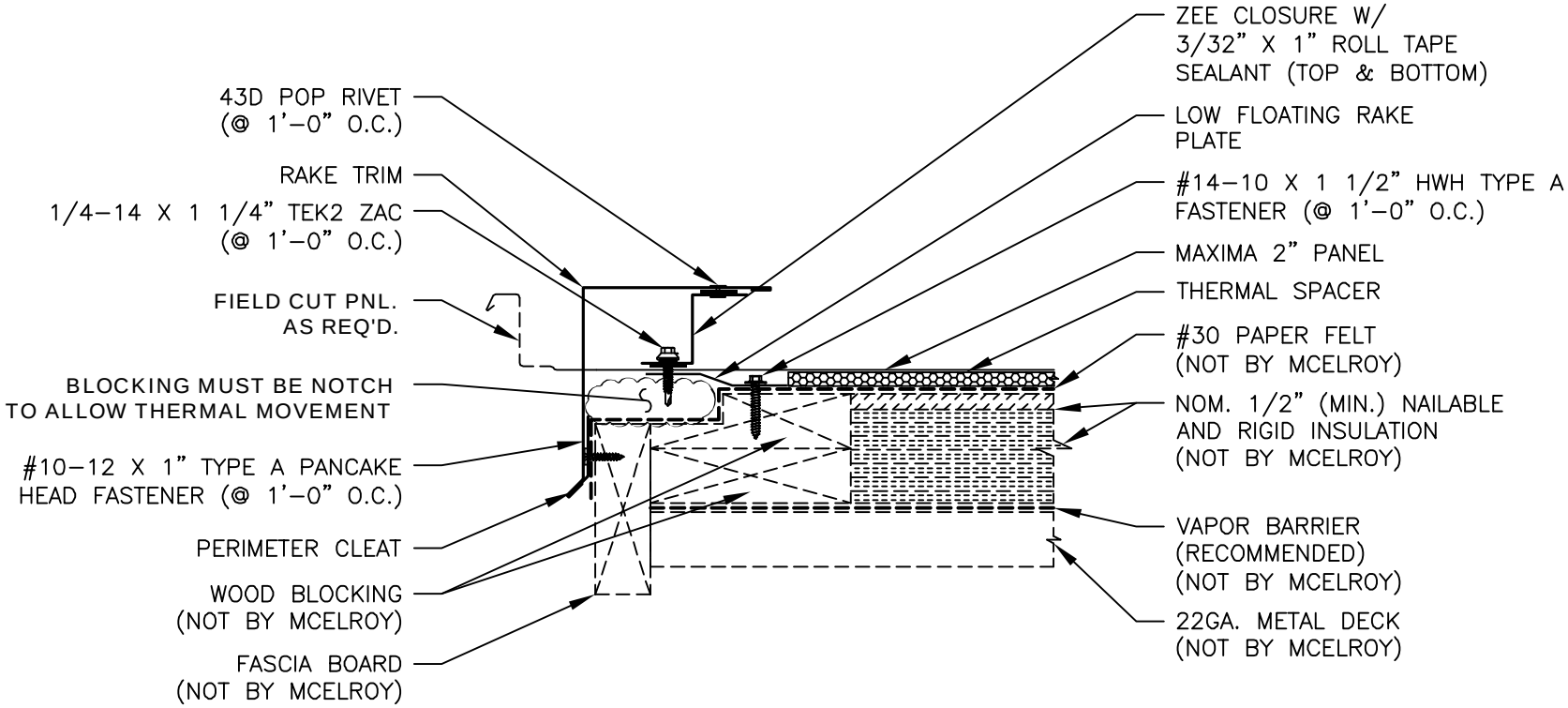
RAKE DETAIL (OFF MODULE)