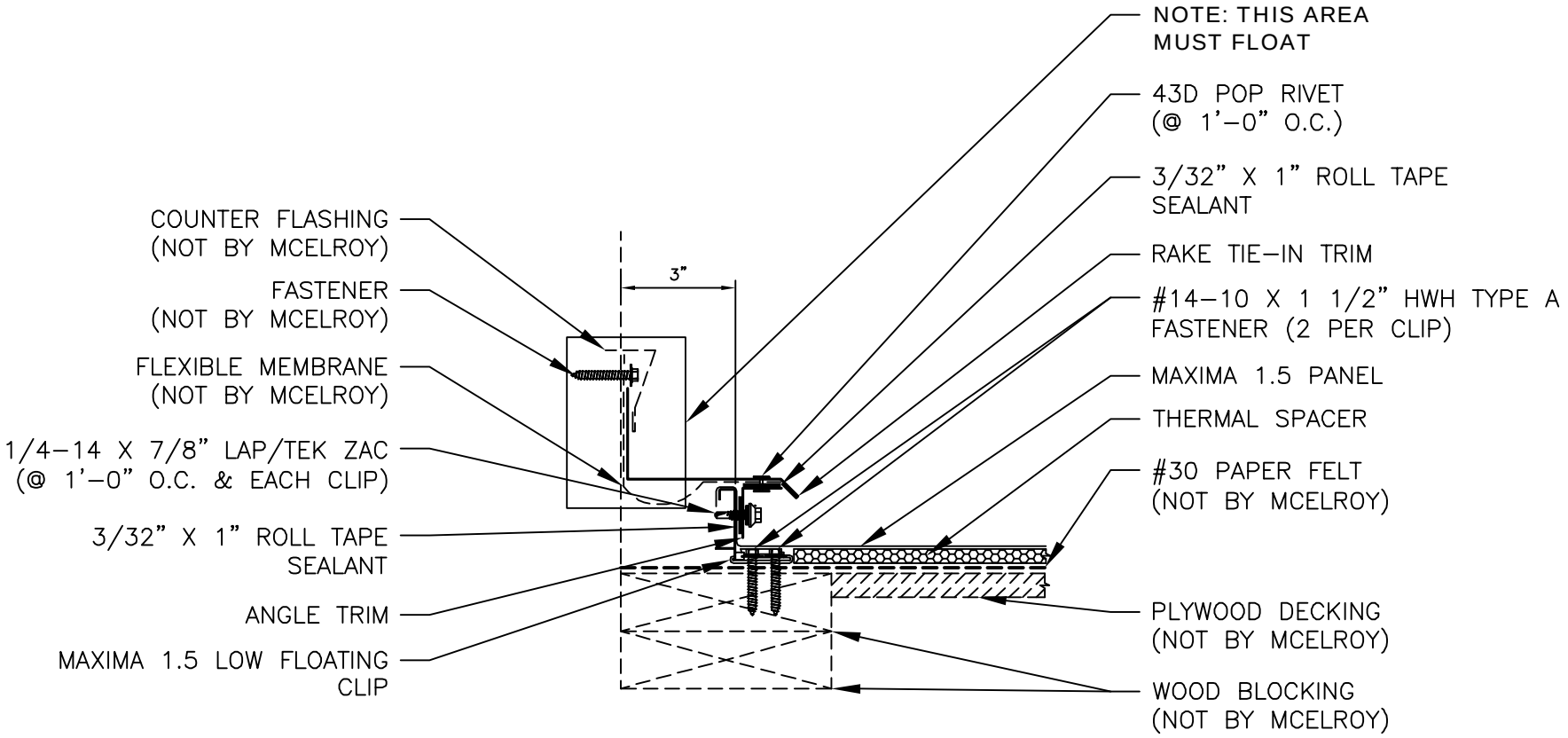# RAKE TIE-IN DETAIL