MAXIMA 3"

RAKE TIE-IN DETAIL

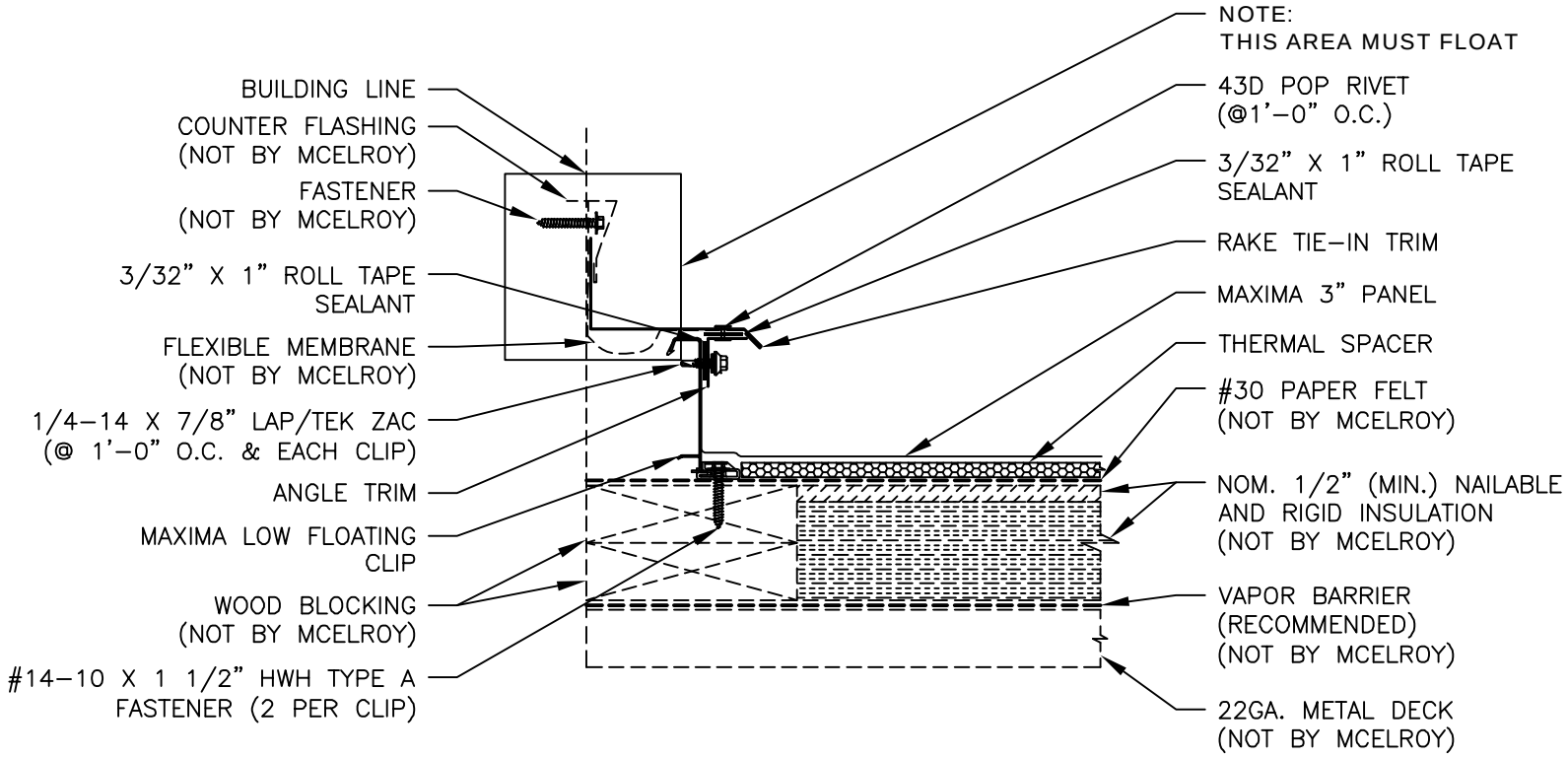

McELROY METAL, INC.

DATE CREATED: 03/11/08