MAXIMA 1.5

RIDGE DETAIL

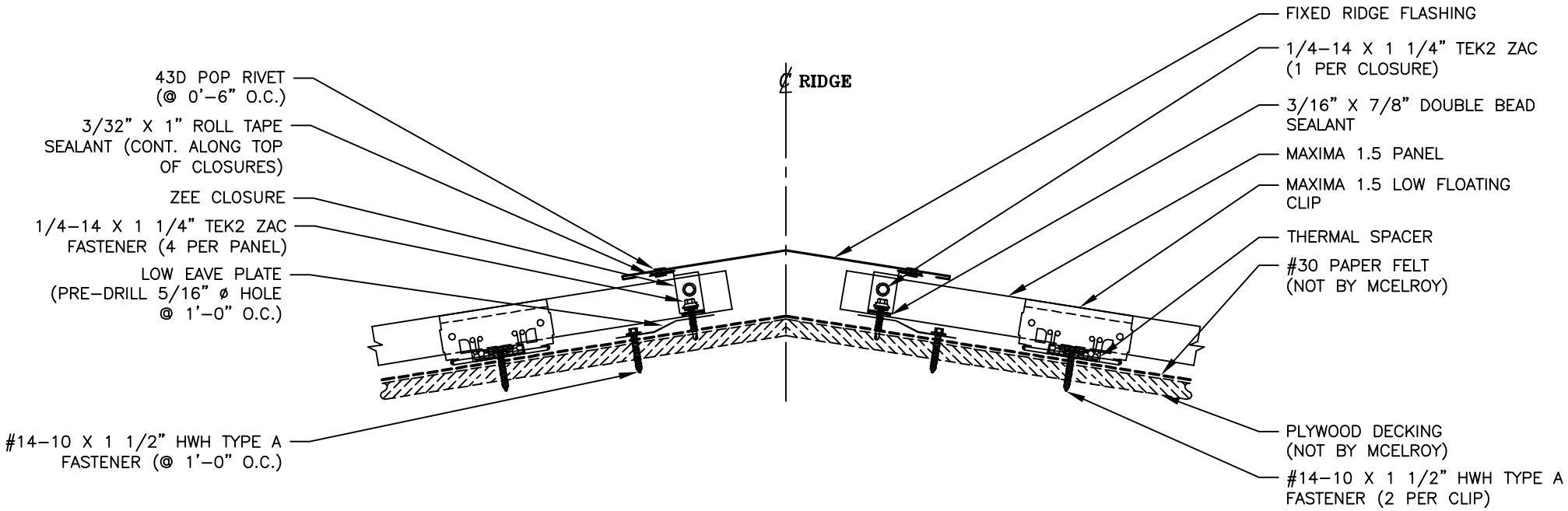

McELROY METAL, INC.

DATE CREATED: 01/03/08