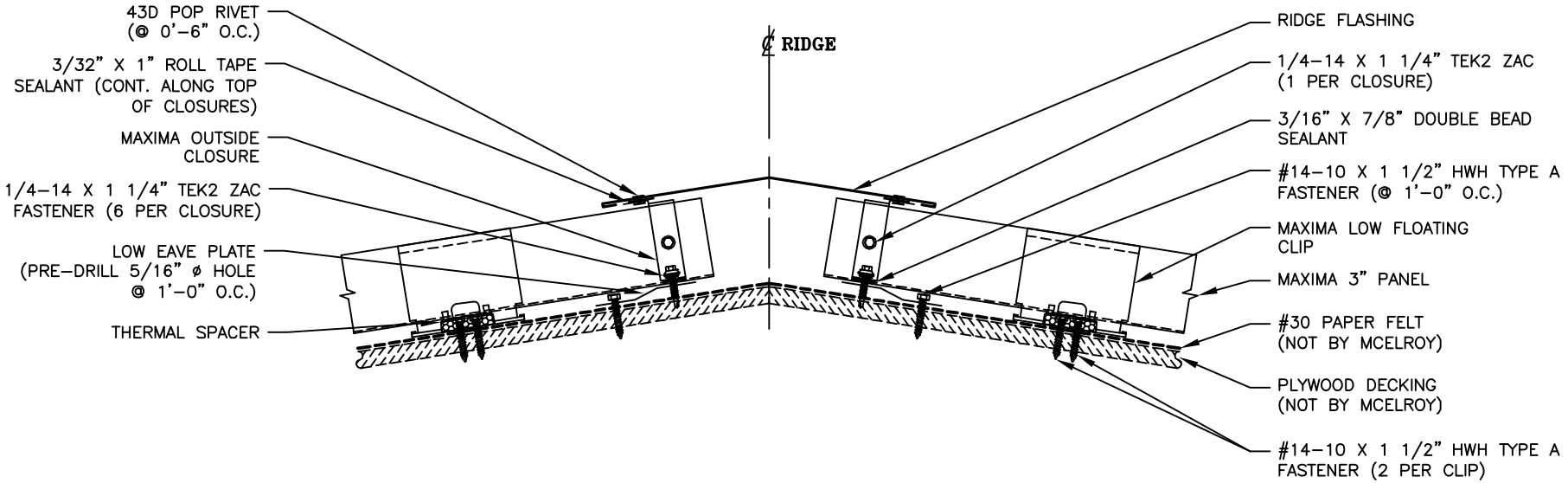# RIDGE DETAIL