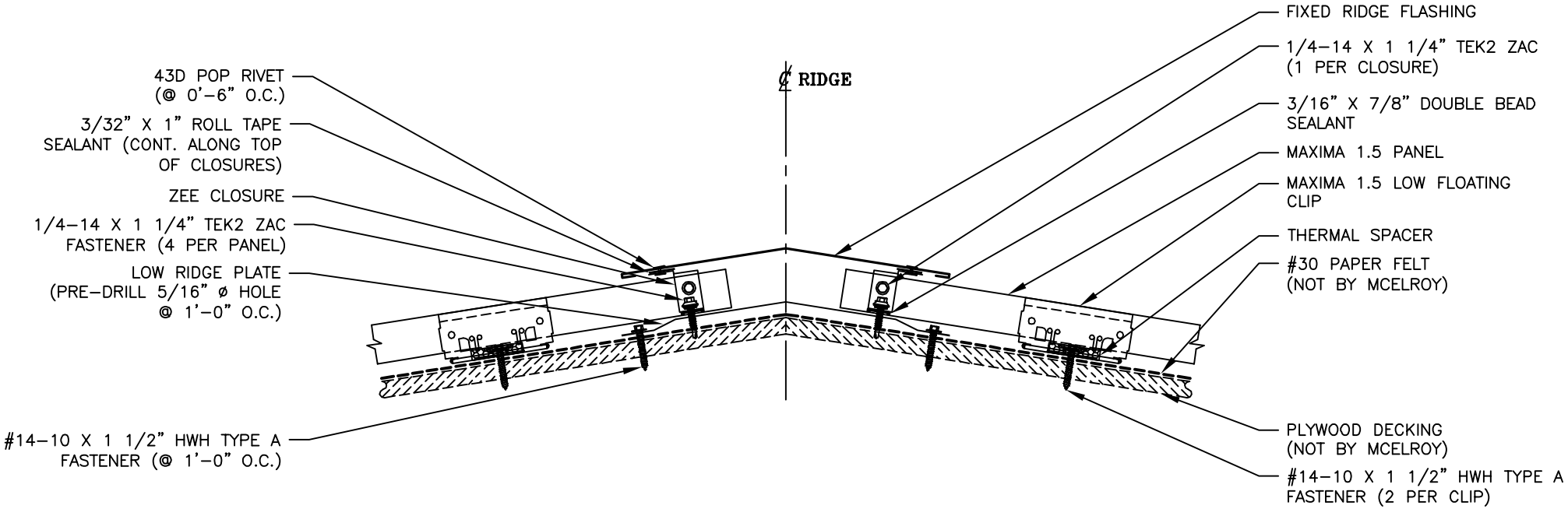RIDGE DETAIL (RIDGE PLATE)