MAXIMA ADV

EAVE DRIP TRIM DETAIL

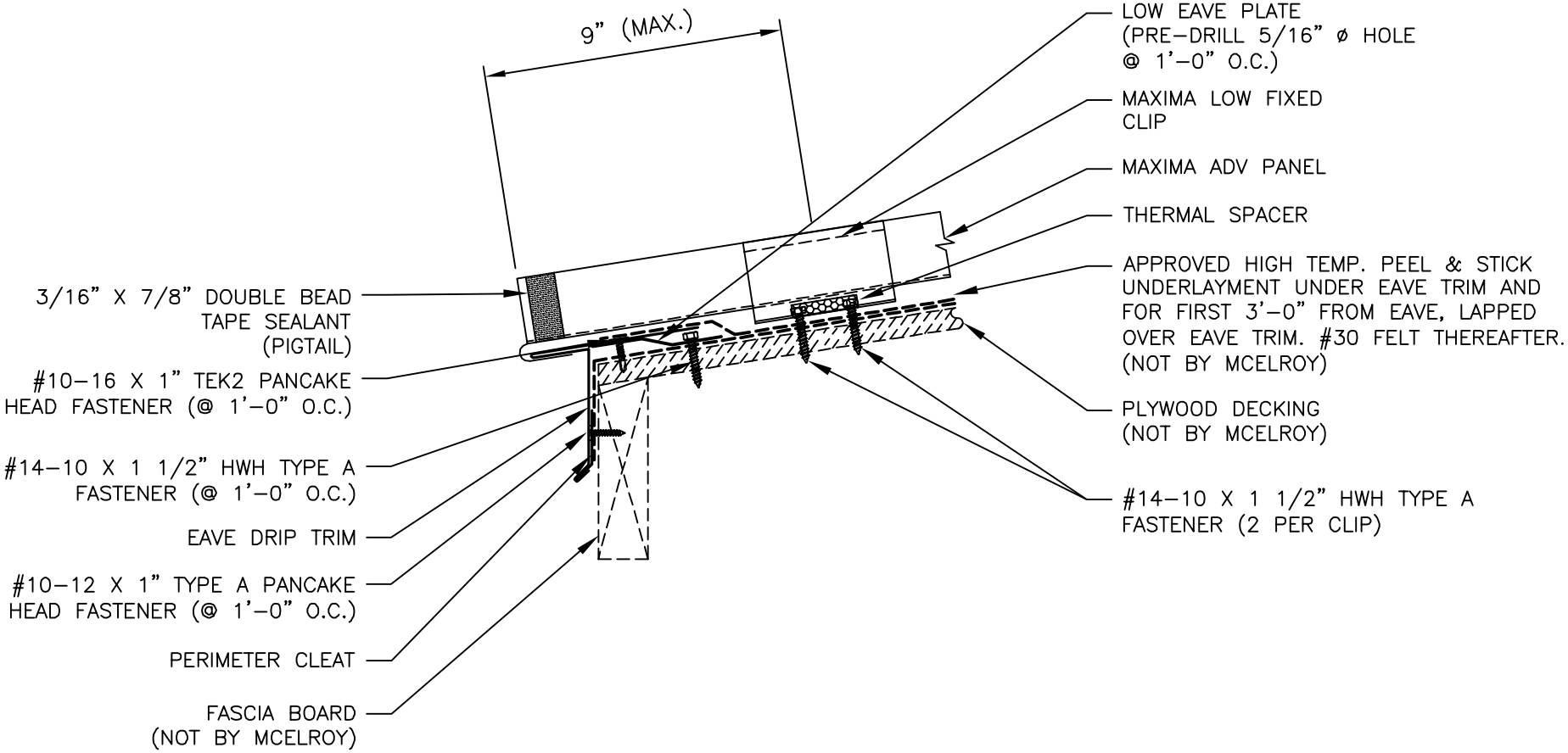

McELROY METAL, INC.

DATE CREATED: 03/05/08