MAXIMA 2"

# EAVE DRIP TRIM DETAIL (ALT.)

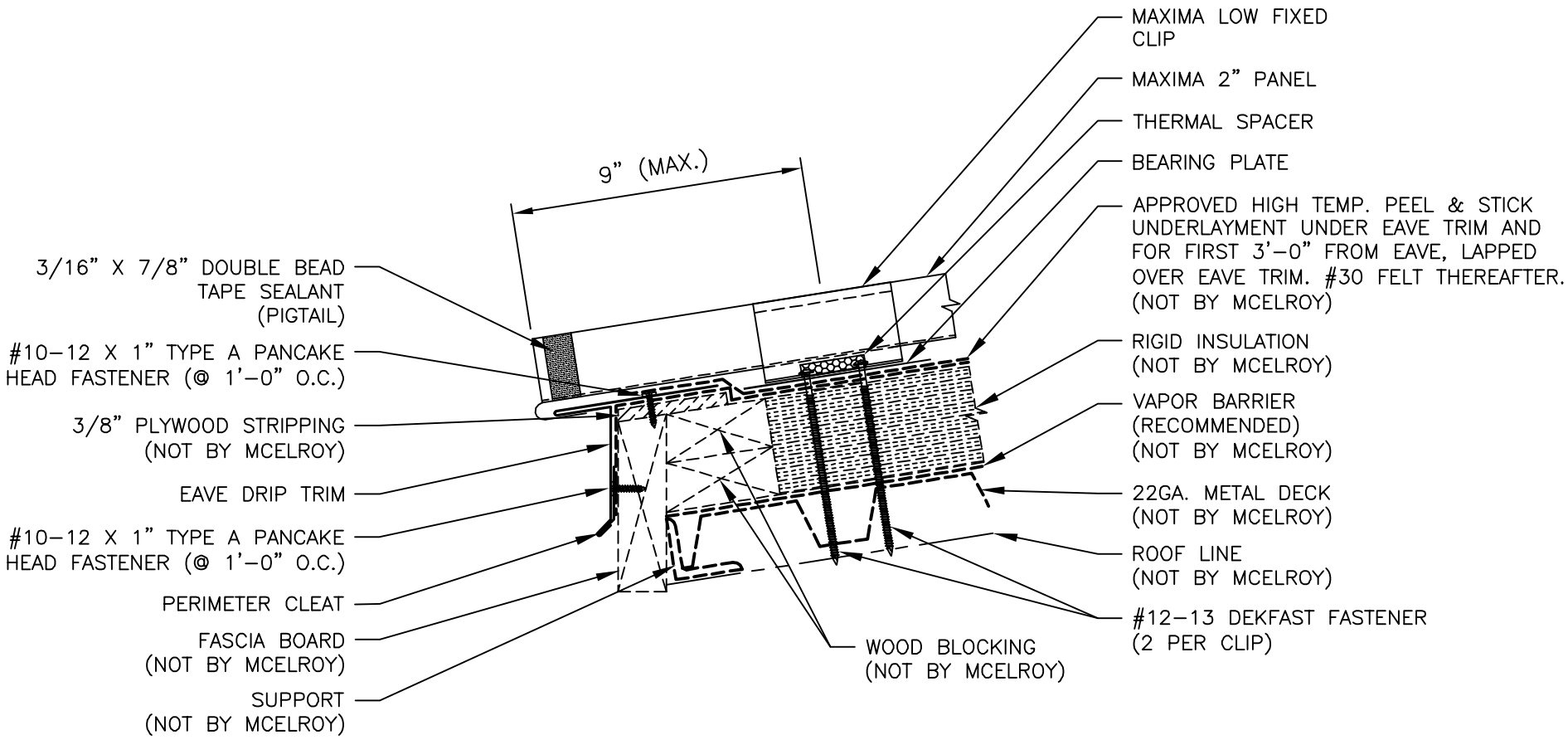


McELROY METAL, INC.

DATE CREATED: 03/07/08