MAXIMA 2"
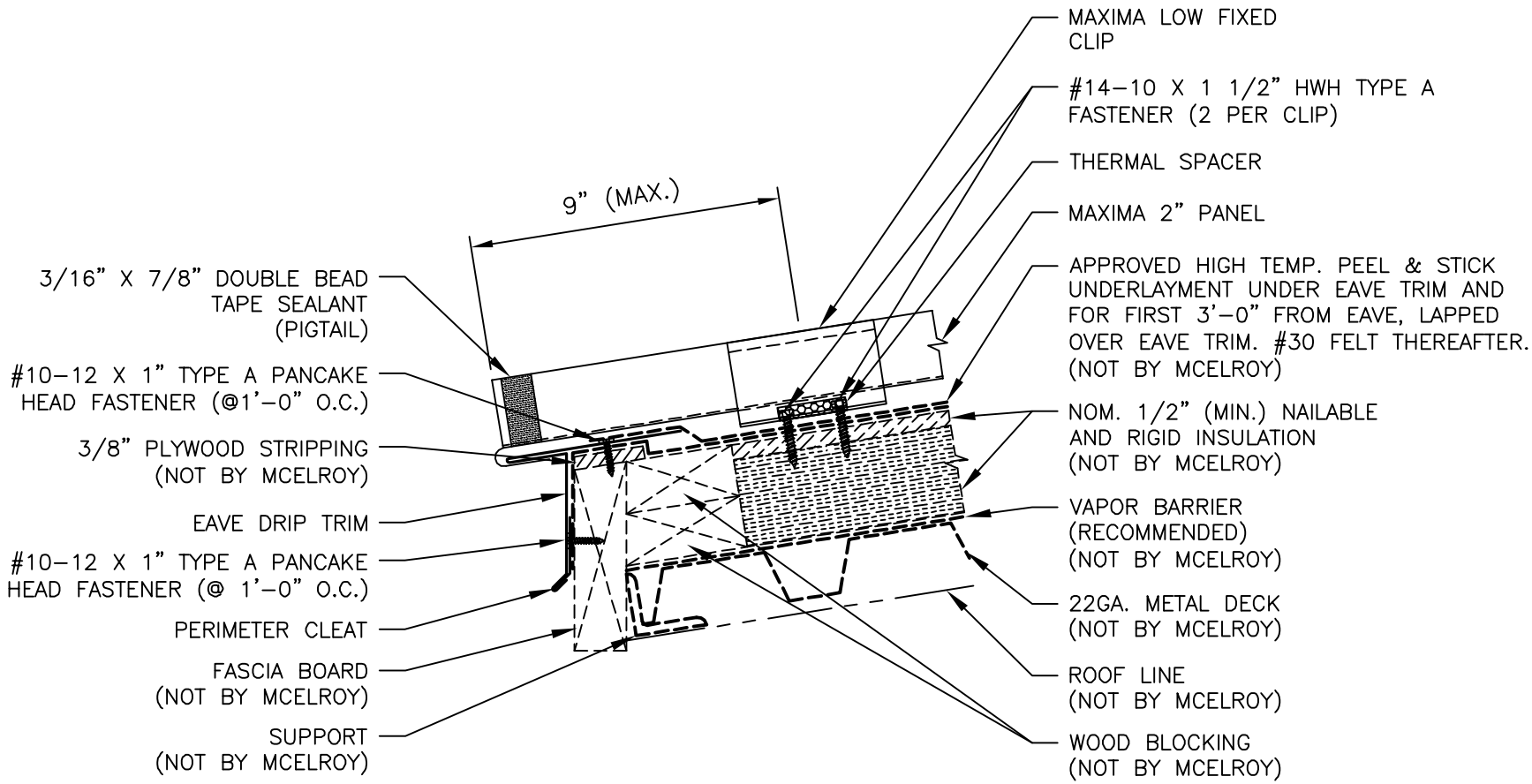
EAVE DRIP TRIM DETAIL (ALT.)