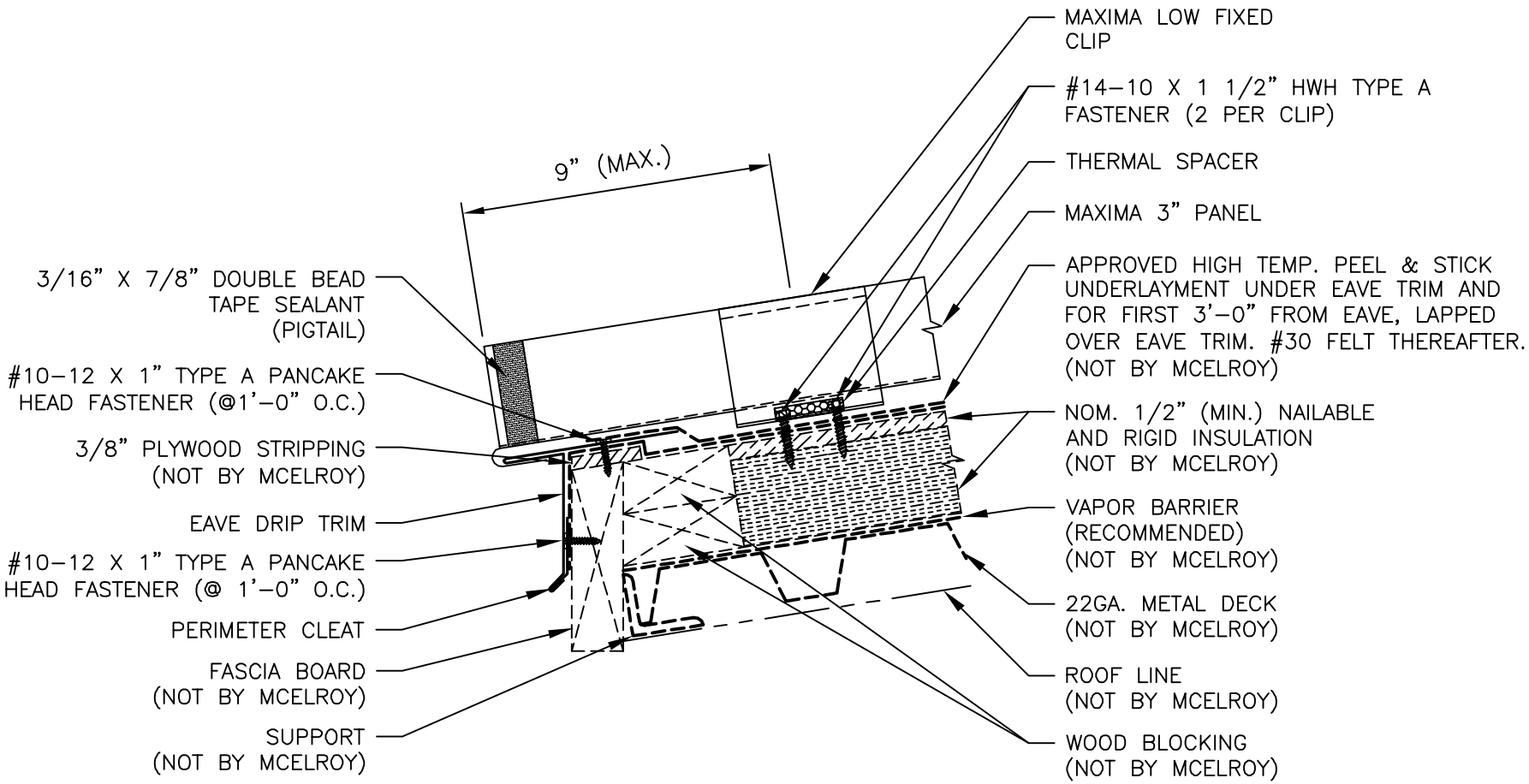EAVE DRIP TRIM DETAIL (ALT.)