MAXIMA ADV
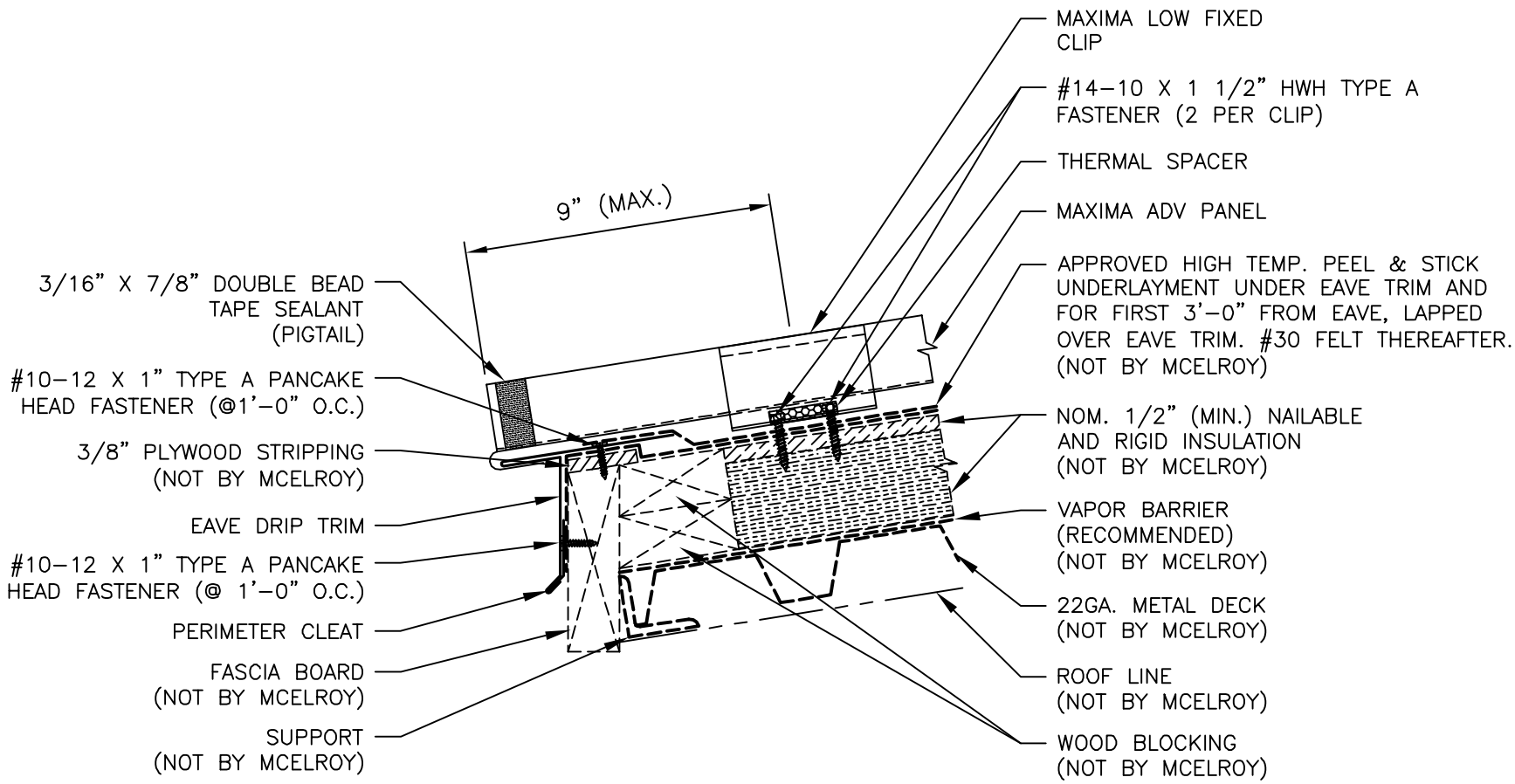
EAVE DRIP TRIM DETAIL (ALT.)