HIP DETAIL

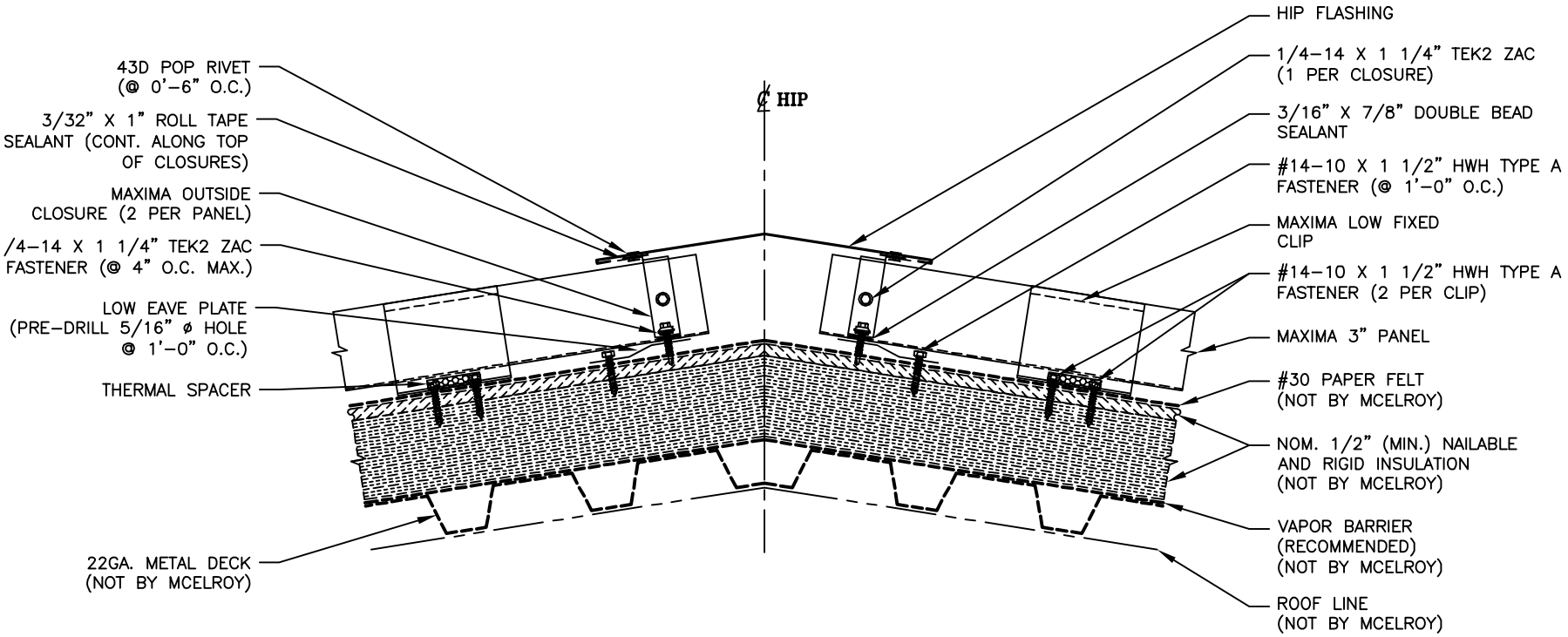
43D POP RIVET
(@ 0'-6" O.C.)
3/32" X 1" ROLL TAPE
SEALANT (CONT. ALONG TOP
OF CLOSURES)
MAXIMA OUTSIDE
CLOSURE (2 PER PANEL)
1/4-14 X 1 1/4" TEK2 ZAC
FASTENER (@ 4" O.C. MAX.)
LOW EAVE PLATE
(PRE-DRILL 5/16" ø HOLE
@ 1'-0" O.C.)
THERMAL SPACER
22GA. METAL DECK
(NOT BY MCELROY)
℄ HIP
HIP FLASHING
1/4-14 X 1 1/4" TEK2 ZAC
(1 PER CLOSURE)
3/16" X 7/8" DOUBLE BEAD
SEALANT
#14-10 X 1 1/2" HWH TYPE A
FASTENER (@ 1'-0" O.C.)
MAXIMA LOW FIXED
CLIP
#14-10 X 1 1/2" HWH TYPE A
FASTENER (2 PER CLIP)
MAXIMA 3" PANEL
#30 PAPER FELT
(NOT BY MCELROY)
NOM. 1/2" (MIN.) NAILABLE
AND RIGID INSULATION
(NOT BY MCELROY)
VAPOR BARRIER
(RECOMMENDED)
(NOT BY MCELROY)
ROOF LINE
(NOT BY MCELROY)