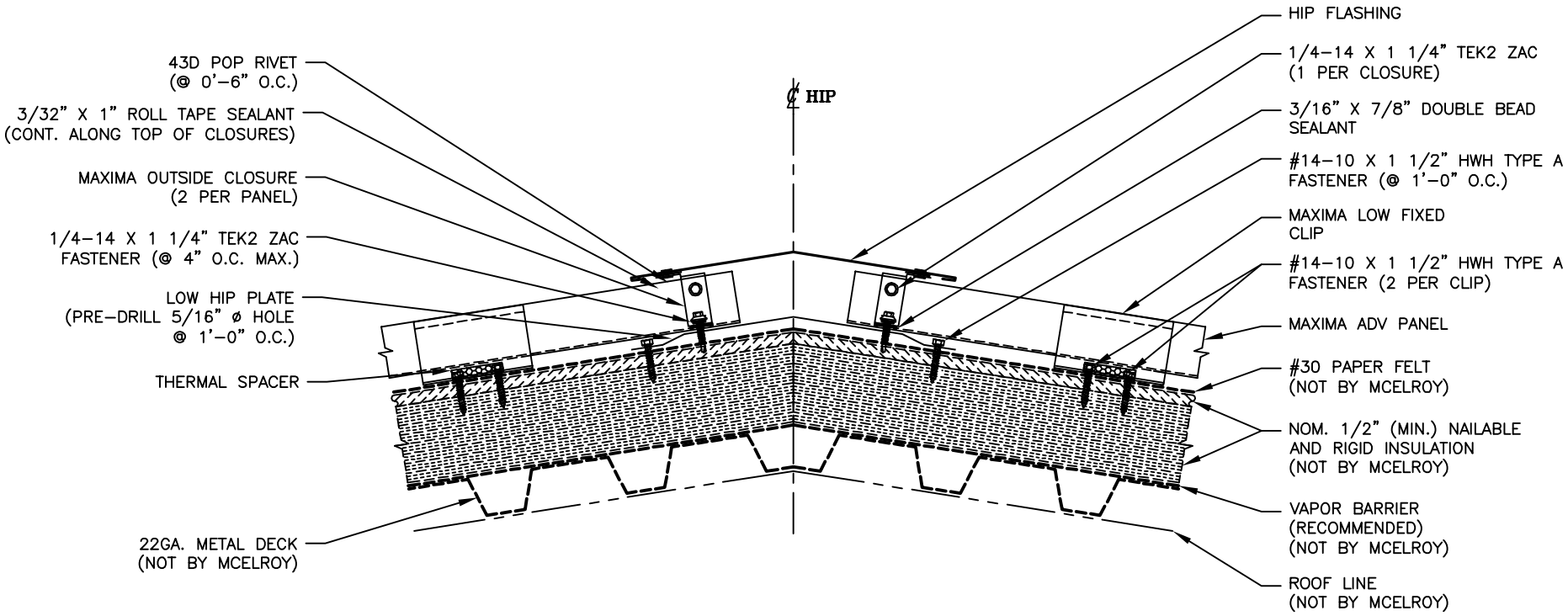HIP DETAIL (PLATE)