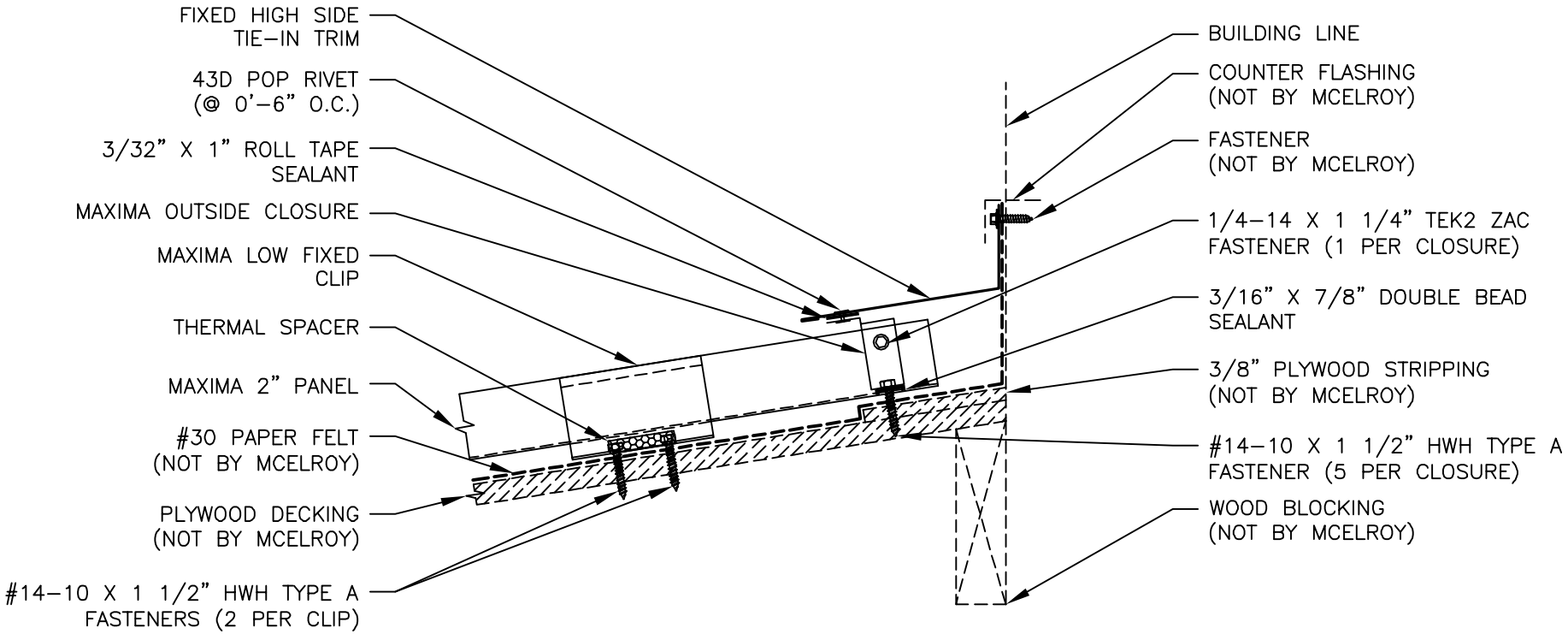HI-SIDE TIE-IN DETAIL (ALT.)