MAXIMA 2"

RAKE DETAIL

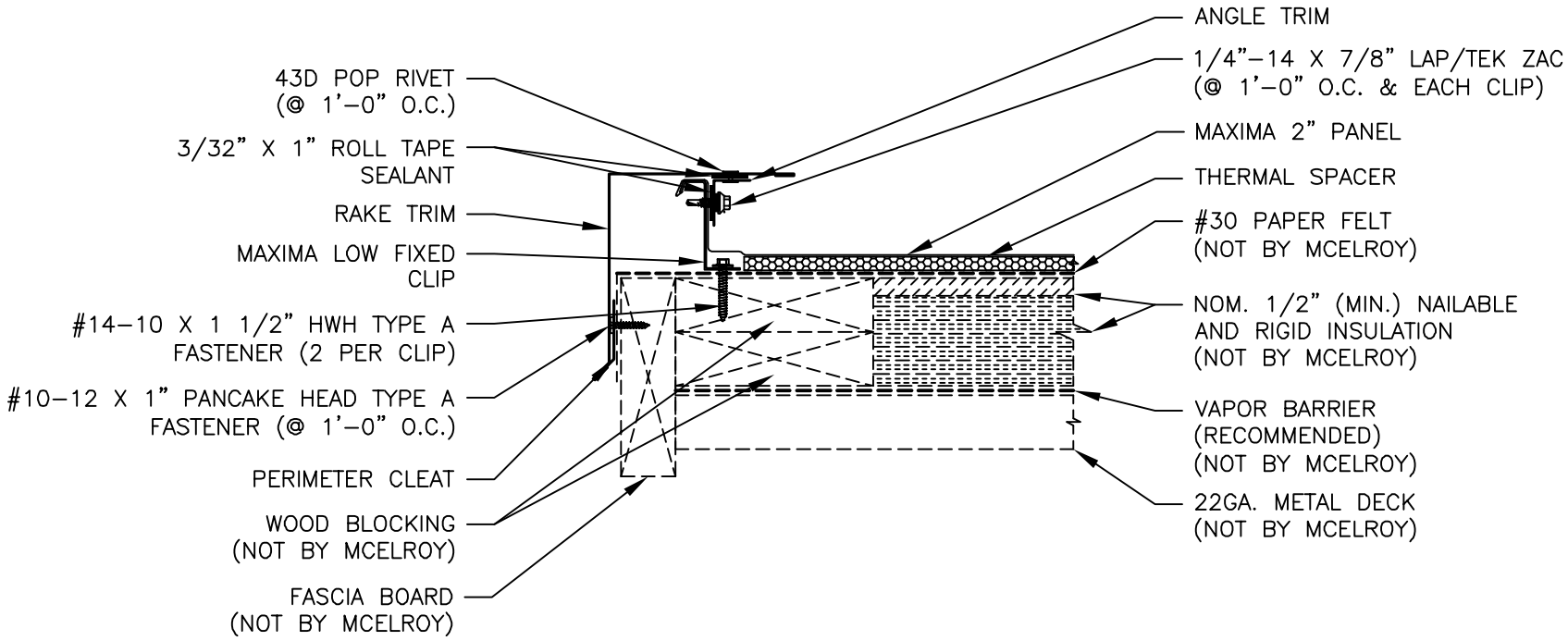

McELROY METAL, INC.

DATE CREATED: 03/07/08