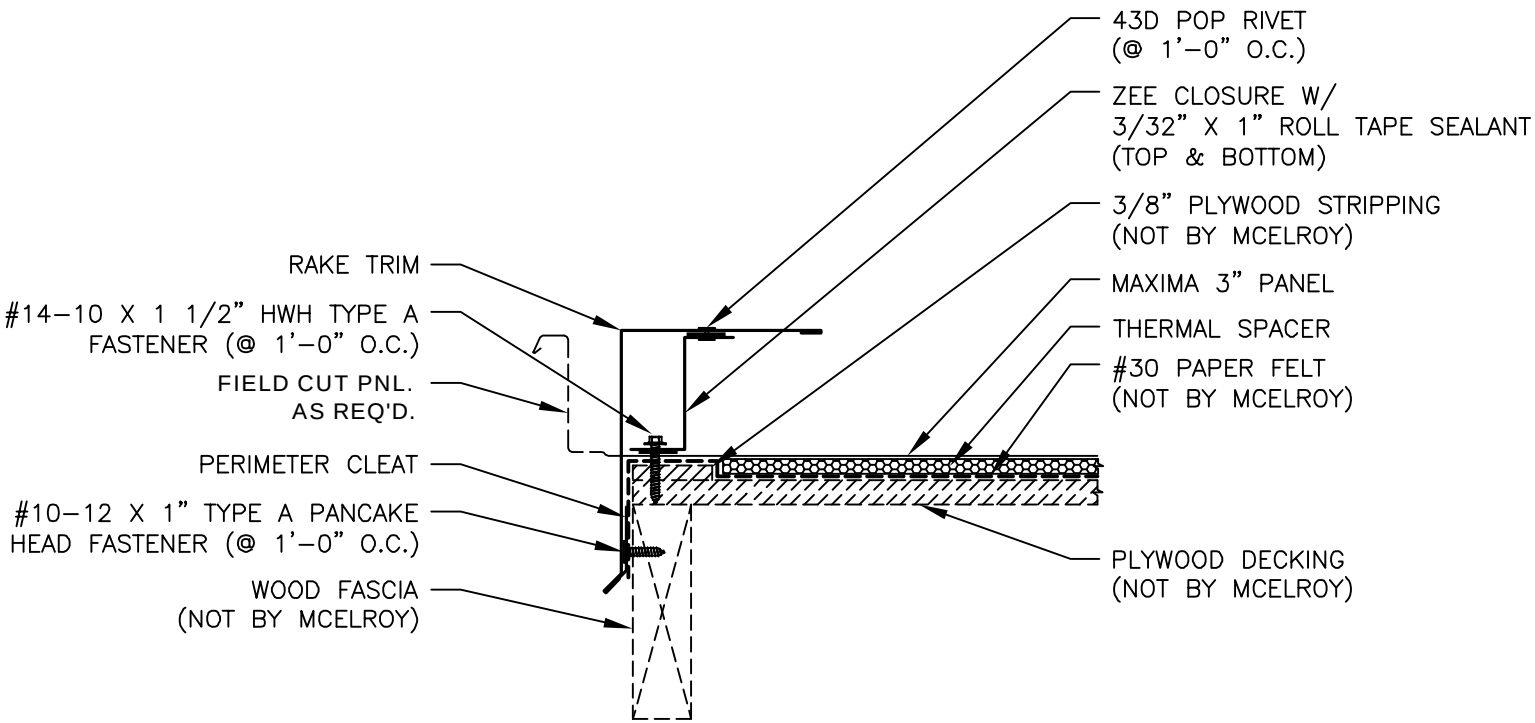RAKE DETAIL (OFF MODULE) (ALT.)