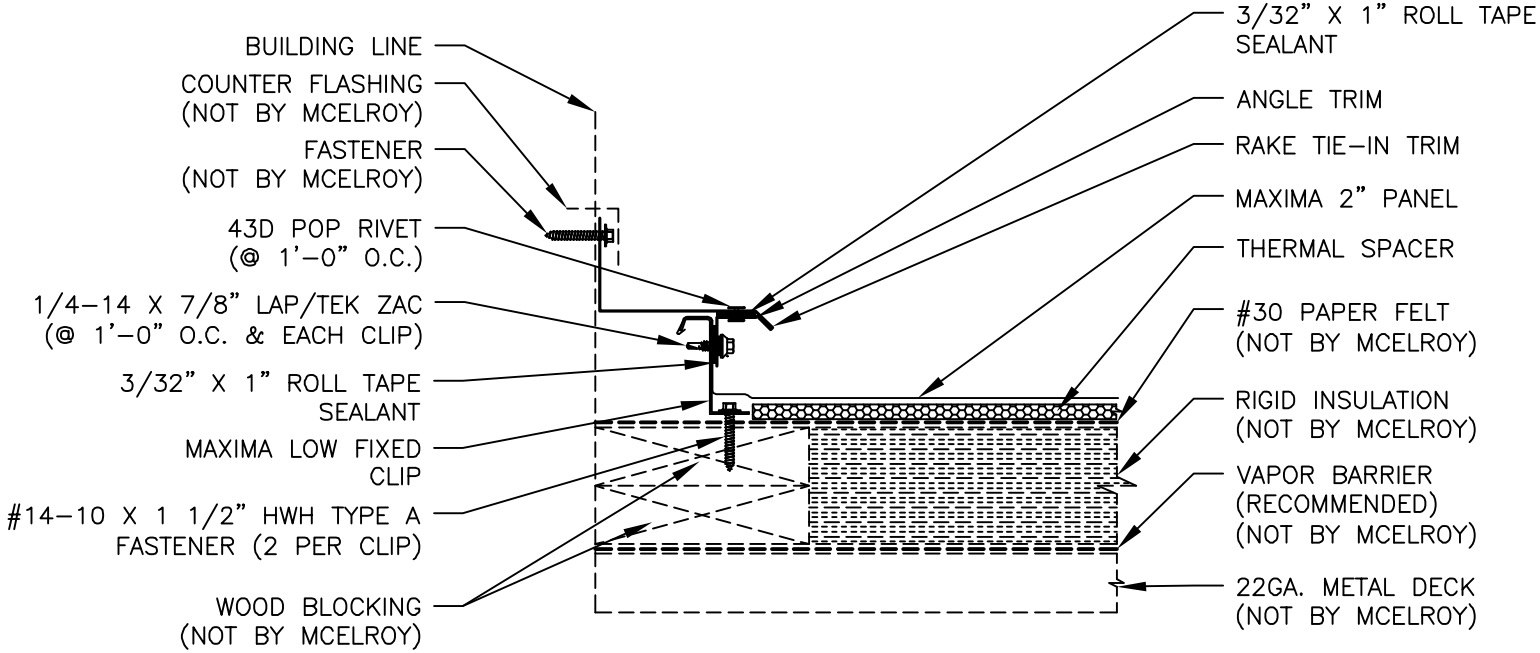RAKE TIE-IN DETAIL