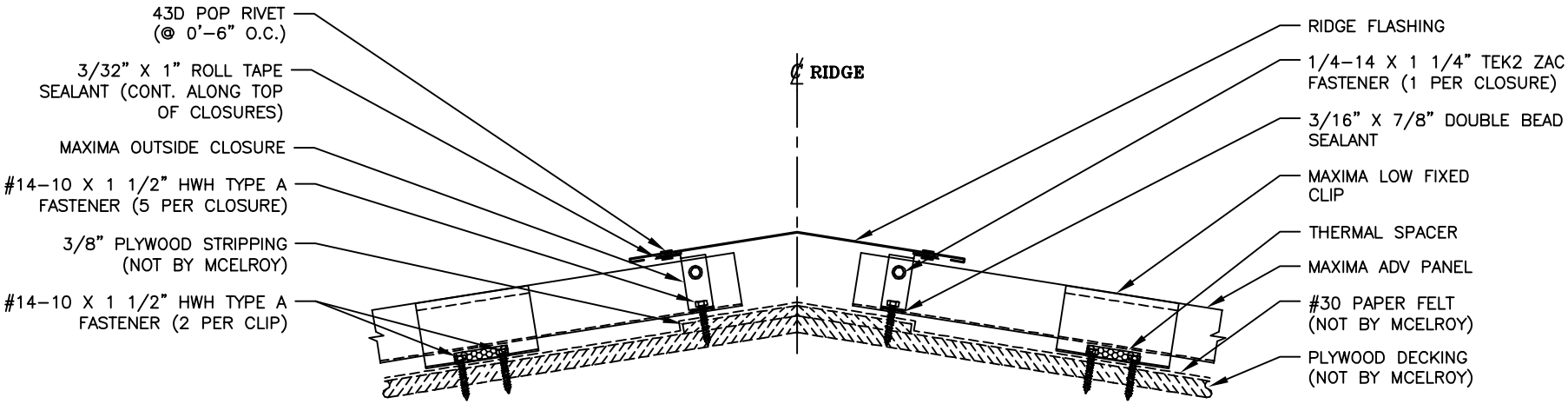RIDGE DETAIL (ALT.)