MAXIMA 2"

HIP DETAIL (PLATE)

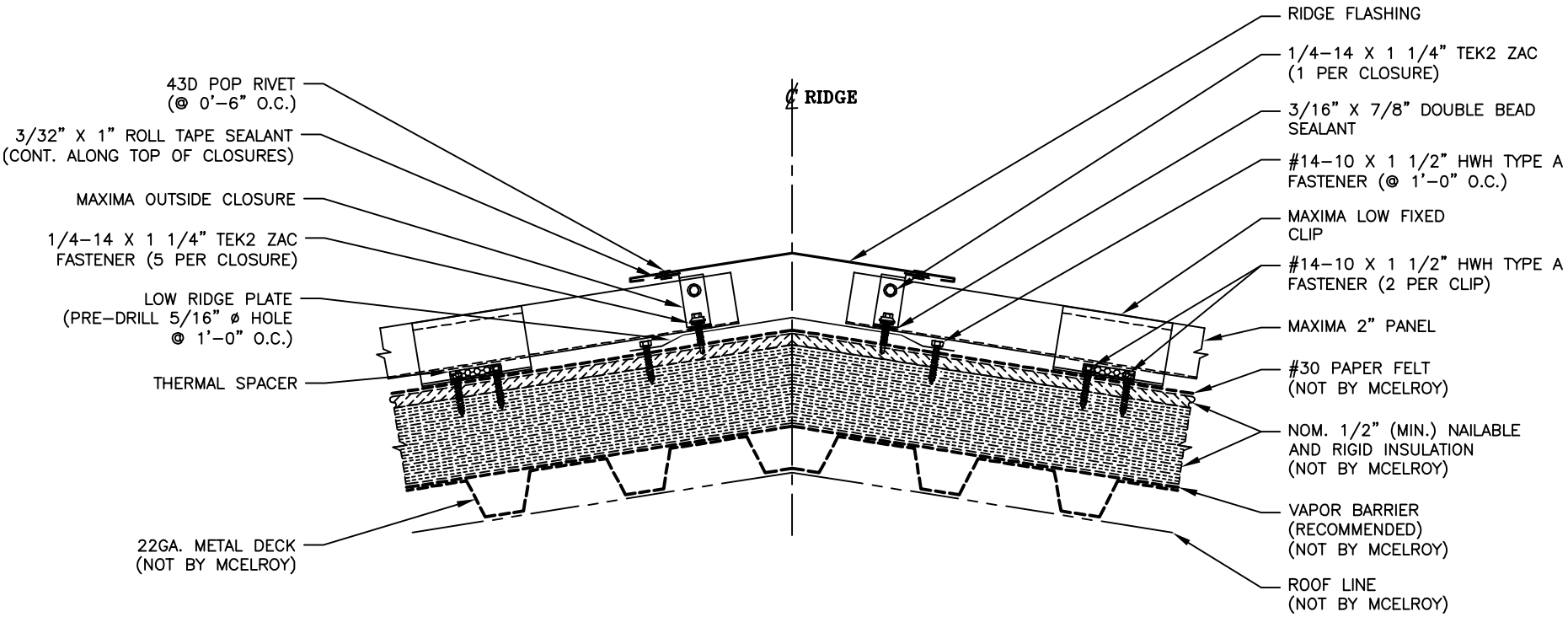

McELROY METAL, INC.

DATE CREATED: 03/07/08